ESTABLISHED 1875

COLLIER Township

Standard Details

January 2009

GN-1	GENERAL NOTES	DECEMBER 2008
GN-2	GENERAL NOTES	DECEMBER 2008

EROSION CONTROL DETAILS

ES-1	18" SILT BARRIER FENCE	DECEMBER 2008
ES-1A	30" SILT BARRIER FENCE	DECEMBER 2008
ES-2	ROCK FILTER	DECEMBER 2008
ES-3	SILT BARRIER FENCE FOR INLET PROTECTION	DECEMBER 2008
ES-4	SILT SACK	DECEMBER 2008
ES-4A	INLET SEDIMENT FILTERS	DECEMBER 2008
ES-4B	INLET SEDIMENT FILTERS FOR CURBED LOCATIONS	DECEMBER 2008
ES-5	SEEDING SCHEDULE	DECEMBER 2008
ES-6	LAWN AND GRASS AREA RESTORATION	DECEMBER 2008

ROADWAY AND SITE DRAINAGE DETAILS

RSD-1	PIPE UNDERDRAIN / PAVEMENT BASE DRAIN	DECEMBER 2008
RSD-2	TYPICAL BEDDING AND PIPE ZONE FOR RCP / SPECIAL BEDDING	DECEMBER 2008
RSD-3	TRENCH BACKFILL FOR PROPOSED ROADS AND STREETS	DECEMBER 2008
RSD-4	POLYETHYLENE PIPE SPECIFICATIONS	DECEMBER 2008
RSD-5	PIPE ANCHOR	DECEMBER 2008
RSD-6	TYPE-M INLET (FRAME AND BICYCLE SAFE GRATE)	DECEMBER 2008
RSD-6A	TYPE-M INLET (CAST IRON VANED GRATE)	DECEMBER 2008
RSD-6B	TYPE-M INLET (BOX)	DECEMBER 2008
RSD-7	PRECAST CONCRETE MANHOLE (8" TO 18") – MANHOLE SLAB TOP	DECEMBER 2008
RSD-8	PRECAST CONCRETE MANHOLE (20" TO 33")	DECEMBER 2008
RSD-9	CIRCULAR MANHOLE FRAME AND COVER	DECEMBER 2008
RSD-10	CONCRETE MANHOLE (36" AND UP)	DECEMBER 2008
RSD-11	LADDER BARS FOR MANHOLES AND INLETS	DECEMBER 2008
RSD-12/1	ENDWALLS (15" TO 33" PIPES)	DECEMBER 2008
RSD-12/2	ENDWALLS (36" TO 72" PIPES)	DECEMBER 2008
RSD-13/1	ROOF DRAIN SUMP OUTLET	DECEMBER 2008
RSD-13/2	COMMON COLLECTOR PIPE CONNECTION	DECEMBER 2008
RSD-14	NO DUMPING – DRAINS TO RIVER DISK	DECEMBER 2008

STORMWATER MANAGEMENT DETAILS

SWM-1/1	PERMANENT EARTH DAM-PLAN VIEW	DECEMBER 2008
SWM-1/2	PERMANENT EARTH DAM-SECTION A-A	DECEMBER 2008
SWM-1/3	PERMANENT EARTH DAM-SECTIONS B-B AND C-C	DECEMBER 2008
SWM-2	CONCRETE ANTI-SEEP COLLAR	DECEMBER 2008
SWM-2A	CORRUGATED METAL ANTI-SEEP COLLAR	DECEMBER 2008
SWM-3	CONCRETE INLET RISER FOR DETENTION BASINS	DECEMBER 2008
SWM-4	CORRUGATED METAL RISER PIPE FOR TEMPORARY SEDIMENT BASINS	DECEMBER 2008
SWM-5	TRASH RACK AND ANTI-VORTEX DEVICE FOR TEMPORARY SEDIMENT BASINS	DECEMBER 2008
SWM-6	ROOF DRAIN / SUMP STORAGE CHART (25 YEAR STORM EVENT DESIGN)	DECEMBER 2008
SWM-6A	ROOF DRAIN / SUMP STORAGE CHART (100 YEAR STORM EVENT DESIGN)	DECEMBER 2008
SWM-7	ROOF DRAIN SUMP	DECEMBER 2008
SWM-7A	ROOF DRAIN SUMP OUTLET STRUCTURE	DECEMBER 2008
SWM-8	OUTLET PROTECTION (MINIMUM TAILWATER CONDITIONS)	DECEMBER 2008
SWM-8A	OUTLET PROTECTION (MAXIMUM TAILWATER CONDITIONS)	DECEMBER 2008

ROADWAY DETAILS

R-1	TYPICAL CROSS-SECTION LOCAL ROADWAY – CONVENTIONAL SUBDIVISION	DECEMBER 2008
R-1A	TYPICAL CROSS-SECTION LOCAL ROADWAY – CONSERVATION SUBDIVISION	DECEMBER 2008
R-2	ROADWAY PAVING MATERIALS	DECEMBER 2008
R-3	TYPICAL UTILITY LOCATIONS-CONVENTIONAL SUBDIVISION	DECEMBER 2008
R-3A	TYPICAL UTILITY LOCATIONS-CONSERVATION SUBDIVISION	DECEMBER 2008
R-4	BITUMINOUS PAVEMENT RESTORATION	DECEMBER 2008
R-4A	CONCRETE PAVEMENT RESTORATION	DECEMBER 2008
R-5	CONCRETE DRIVEWAY / SIDEWALK APRON	DECEMBER 2008
R-5A	CONCRETE SHOULDER RESTORATION	DECEMBER 2008
R-6	CONCRETE SIDEWALK	DECEMBER 2008
R-6A	CONCRETE SIDEWALK REPLACEMENT	DECEMBER 2008
R-7	STREET SIGN	DECEMBER 2008
R-8	STREET LIGHT	DECEMBER 2008
R-9	TYPICAL BITUMINOUS CONCRETE WEDGE CURB	DECEMBER 2008
R-10	TYPICAL BITUMINOUS CONCRETE KEYWAY	DECEMBER 2008
R-11	CUL-DE-SAC WITH ISLAND	DECEMBER 2008
R-12	CUL-DE-SAC WITHOUT ISLAND	DECEMBER 2008
R-13	BITUMINOUS DRIVEWAY AND BERM RESTORATION	DECEMBER 2008
R-14	STANDARD CONCRETE CURB	DECEMBER 2008

Scale: N.T.S.		Township of Collier
Drwn By:	Chkd By: / Appd By:	Standard Details
Filename: Collierdet-1.dwg		Index Sheet 1 of 2
Date: December 2008		

ROADWAY DETAILS (CONTINUED)

R-15	SURFACE TREATMENT FOR UNPAVED ROADS AND SHOULDERS	DECEMBER 2008
R-16	AGGREGATE DRIVEWAY RESTORATION	DECEMBER 2008
R-17	TYPICAL INTERSECTION DESIGN	DECEMBER 2008
R-18	LOCAL ROAD AND STREET INTERSECTION SITE DISTANCE REQUIREMENT	DECEMBER 2008

SITE DETAILS

S-1	PARKING CONFIGURATIONS	DECEMBER 2008
S-2	ADA RAMPS	DECEMBER 2008
S-3	CONCRETE MONUMENT	DECEMBER 2008
S-4	BENCH DRAIN	DECEMBER 2008
S-5	MULTI-PURPOSE WALKING AND BIKING TRAIL	DECEMBER 2008
S-6	EMERGENCY ACCESS DRIVE	DECEMBER 2008
S-7	CHAIN LINK FENCE (1 of 2)	DECEMBER 2008
S-8	CHAIN LINK FENCE (2 of 2)	DECEMBER 2008

Scale: N.T.S.			Township of Collier Standard Details Index Sheet 2 of 2
Drwn By:	Chkd By:	Appd By:	
Filename: Collierdet-1.dwg			
Date: December 2008			

GENERAL NOTES

1. THE PURPOSE OF THESE STANDARDS IS TO DEFINE THE MINIMUM ACCEPTABLE QUALITY OF MATERIALS AND WORKMANSHIP. IT IS NOT INTENDED TO PRECLUDE OTHER MATERIALS OR DESIGNS. OTHER DESIGN DETAILS MAY BE USED, HOWEVER, PROVIDED THEY RECEIVE PRIOR WRITTEN APPROVAL OF THE TOWNSHIP AFTER RECOMMENDATION OF THE ENGINEER.

2. CONDITIONS AT THE SITE WHICH CANNOT ALWAYS BE ANTICIPATED MAY NECESSITATE DEVIATIONS FROM TOWNSHIP STANDARD DETAILS; THEREFORE, THE TOWNSHIP OF COLLIER HEREIN RESERVES THE RIGHT TO DIRECT CHANGES IN THE FIELD AS NEEDED AT ITS DISCRETION.

3. MATERIALS AND CONSTRUCTION REQUIREMENTS SHALL CONFORM TO THESE DETAILS AND TO THE LATEST EDITION OF THE PENNSYLVANIA DEPARTMENT OF TRANSPORTATION SPECIFICATIONS FORM 408 (PENNDOT 408). PENNDOT MATERIALS CERTIFICATIONS TO BE SUBMITTED TO TOWNSHIP ON ALL MATERIALS DELIVERED TO SITE.

4. EROSION AND SEDIMENTATION CONTROL FACILITIES SHALL BE PROVIDED ON ALL SITES WHERE THE GROUND SURFACE IS DISTURBED PURSUANT TO TOWNSHIP ORDINANCES. THESE FACILITIES SHALL BE DESIGNED IN ACCORDANCE WITH CURRENT MANUALS PUBLISHED BY THE PENNSYLVANIA DEPARTMENT OF ENVIRONMENTAL PROTECTION AND THE ALLEGHENY COUNTY CONSERVATION DISTRICT.

5. ALL DISTURBED AREAS SHALL BE PROMPTLY SEEDED, MULCHED AND FERTILIZED. THE FOLLOWING MINIMUM SEEDING FORMULAS SHALL BE USED IN ACCORDANCE WITH PENNDOT 408:

LAWN AREAS	– FORMULA B
SLOPE AREAS 3:1 AND STEEPER	– FORMULA W
TEMPORARY SEEDING	– FORMULA E

6. ALL TRENCHES FOR UTILITIES INCLUDING STORM SEWERS, SANITARY SEWERS, WATERLINES, GAS LINES, ELECTRIC LINES, TELEPHONE LINES AND CABLE TELEVISION LINES CROSSING OR RUNNING IN TOWNSHIP CARTWAYS SHALL BE BACKFILLED WITH AASHTO No. 57 OR PADOT 2RC OR 2A CRUSHED STONE MECHANICALLY TAMPED IN 4–INCH LIFTS TO PROVIDE 100 PERCENT OF THE DETERMINED DRY WEIGHT DENSITY IN ACCORDANCE WITH PTM No. 112 OR PTM No. 402. NO PIPES IN ANY RIGHT–OF–WAY SHALL BE BACKFILLED WITHOUT INSPECTION BY THE TOWNSHIP. ALL UTILITIES SHALL HAVE A MINIMUM COVER OF 36 INCHES. SLAG IS NOT PERMITTED AS BACKFILL. ALL UTILITY ROADWAY CROSSINGS MUST BE INSTALLED PRIOR TO ROADWAY CONSTRUCTION. ALL MAINLINE UTILITY ROADWAY CROSSINGS MUST BE MADE AT ROAD INTERSECTIONS, UNLESS OTHERWISE APPROVED BY THE TOWNSHIP.

7. ALL STORM SEWERS WITHIN TOWNSHIP ROADWAY RIGHT–OF–WAYS SHALL BE CORRUGATED POLYETHYLENE PIPE (CPP) ALL STORM SEWERS SHALL BE LAID TO LINE AND GRADE WITH A FULL MOON AND AT A MINIMUM ONE PERCENT GRADE. ALL STORM SEWERS THROUGH STORMWATER DETENTION BASIN EMBANKMENT SHALL BE CLASS III REINFORCED TONGUE AND GROOVE, WATERTIGHT RCP.

8. THE TOWNSHIP OF COLLIER MUST BE NOTIFIED (412 429–6810) 72 HOURS PRIOR TO ANY WORK WITHIN A TOWNSHIP RIGHT–OF–WAY OR PRIOR TO THE START OF ANY PHASE OF CONSTRUCTION OF ANY APPROVED DEVELOPMENT PLAN.

9. ALL FIRE HYDRANT LOCATIONS AND SUPPLY LINES MUST BE APPROVED BY THE TOWNSHIP FIRE CHIEF AND THE MUNICIPAL AUTHORITY. ALL FIRE HYDRANTS SHALL HAVE TWO 2–1/2 INCH NOZZLES AND ONE 4–1/2 INCH STREAMER NOZZLE. 2–1/2 INCH THREAD SHALL BE 3.078 I.D. X 6 THREADS PER INCH. 4–1/2 INCH STREAMER NOZZLE SHALL BE NATIONAL STANDARD THREAD.

10. ALL PIPE BORINGS SHALL HAVE A MINIMUM COVER OF 36 INCHES FROM TOP OF UTILITY LINE TO ROAD SURFACE.

Scale: N.T.S.			Township of Collier Standard Details
Drwn By:	Chkd By:	Appd By:	Detail GN-1 General Notes
Filename: Collierdet–1.dwg			
Date: December 2008			

GENERAL NOTES

11. WHEREIN THESE STANDARDS, DESIGNATIONS TO AASHTO SIEVE SIZES ARE MADE, THEY ARE CROSS REFERENCED TO THE OLD PENNDOT DESIGNATIONS AS FOLLOWS:

PENNDOT	AASHTO
4	1
3A	3
2B	57
PA #2	67
1B	8
1A	10
2A	NONE

12. ALL PAVERS WHO WORK WITHIN EXISTING OR PROPOSED PUBLIC RIGHTS-OF-WAYS IN COLLIER TOWNSHIP MUST BE PENNDOT PRE-QUALIFIED.

13. ALL TRAFFIC SIGNALS INSTALLED OR MODIFIED SHALL BE DESIGNED IN ACCORDANCE WITH THE PENNSYLVANIA DEPARTMENT OF TRANSPORTATION (PENNDOT) PUBLICATION 149 TRAFFIC SIGNAL DESIGN HANDBOOK AND PUBLICATION 148 TRAFFIC STANDARDS – SIGNALS.

14. ALL TRAFFIC SIGNAL INSTALLATIONS SHALL INCLUDE AN ACOUSTIC EMERGENCY VEHICLE PREEMPTION SYSTEM CONFORMING TO THE CURRENT TOWNSHIP SYSTEM. THE SYSTEM SHALL INCLUDE CONFIRMATION BEACONS AND DETECTORS ON EACH APPROACH TO THE INTERSECTION, AS DIRECTED BY THE TOWNSHIP TRAFFIC ENGINEER. THE SYSTEM SHALL OPERATE ON APPROACH PREEMPTION.

15. ALL TRAFFIC SIGNAL INSTALLATIONS SHALL INCLUDE L.E.D. RED, YELLOW AND GREEN VEHICULAR INDICATIONS. L.E.D. WALK AND DON'T WALK INDICATIONS SHALL ALSO BE INSTALLED.

16. ALL TRAFFIC SIGNAL INSTALLATIONS SHALL BE ON MAST ARMS PER PENNDOT STANDARDS.

17. ALL NEW ELECTRIC, TELEPHONE, AND CABLE TELEVISION MAIN LINES AND SERVICE LINES SHALL BE CONSTRUCTED UNDERGROUND.

18. ALL HANDICAPPED PARKING SPACES AND STALLS SHALL CONFORM WITH CURRENT ADA STANDARDS.

19. ACCESS TO DETENTION FACILITIES MUST BE PAVED (DEPTH EQUAL TO ROADWAY PAVING DEPTH) FROM THE ROADWAY TO THE REAR OF THE LOT. THE MINIMUM WIDTH IS 10 FEET.

20. ALL UTILITY CROSSINGS MUST BE DRILLED. NO MOLES, GOFERS, OR SIMILAR MECHANICAL BORING DEVICES WILL BE PERMITTED.

21. STORM SEWER DROP CONNECTIONS FROM INVERT OF OUTFLOW PIPE TO INVERT OF INFLOW PIPES SHALL BE A MAXIMUM OF 2 FT.

22. ALL PRECAST CONCRETE MATERIALS MUST BE SUPPLIED BY A MANUFACTURER LISTED IN PennDOT BULLETIN 15.

23. ALL PAVE MARKINGS AT SIGNALIZED INTERSECTIONS SHALL BE THERMOPLASTIC MARKINGS.

24. ALL ADA RAMPS SHALL COMPLY WITH PennDOT ROADWAY CONSTRUCTION (RC) STANDARDS, LATEST EDITION.

Scale: N.T.S.		Township of Collier Standard Details
Drwn By:	Chkd By:	Appd By:
Filename: Collierdet-1.dwg		Detail GN-2 General Notes
Date: December 2008		

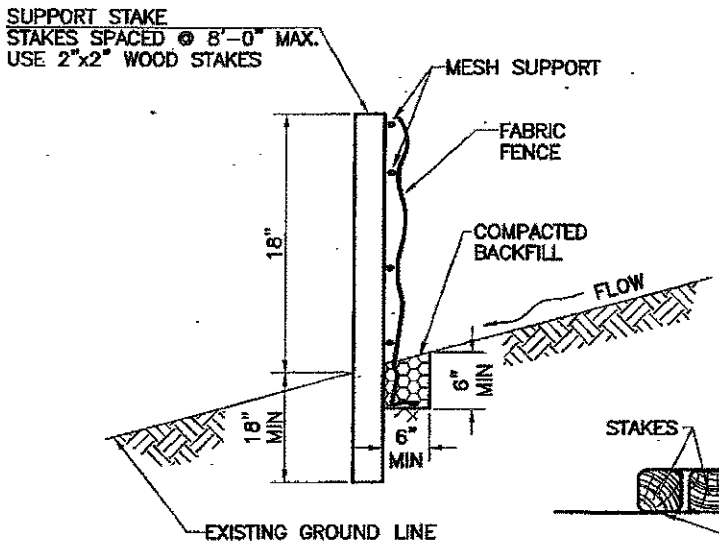

TABLE A1
MAXIMUM SLOPE LENGTHS FOR FILTER FABRIC FENCES

Slope %	Max. Slope Length Above Fence
2	150
5	100
10	50
15	35
20	25
25	20
30	15
35	15
40	15
45	10
50	10

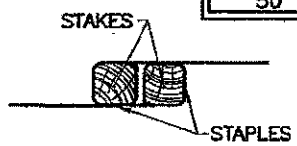

JOINING FENCE SECTIONS

N O T E S :

1. FILTER FABRIC MUST BE INSTALLED AT LEVEL GRADE. BOTH ENDS OF EACH FENCE SECTION MUST BE EXTENDED UPSLOPE SO THAT THE BOTTOM OF THE FENCE SHALL END AT THE TOP OF FENCE ELEVATION.
2. SEDIMENT MUST BE REMOVED WHERE ACCUMULATIONS REACH 1/2 THE ABOVE-GROUND HEIGHT OF THE FENCE.
3. ANY FENCE SECTION WHICH HAS BEEN UNDERMINED OR OVERTOPPED MUST BE IMMEDIATELY REPAIRED TO ORIGINAL CONDITION.
4. STRAW BALES SHALL NOT BE USED.
5. SOURCE: EROSION AND SEDIMENT POLLUTION CONTROL PROGRAM MANUAL 1/1996.
6. DETAILS UTILIZED SHALL BE TO PENNSYLVANIA DEPARTMENT OF ENVIRONMENTAL PROTECTION CURRENT STANDARDS.

Scale: N.T.S.			Township of Collier Standard Details
Drwn By:	Chkd By:	Appd By:	Detail ES-1
Filename: Collierdet-1.dwg			18" Silt Barrier Fence
Date: December 2008			

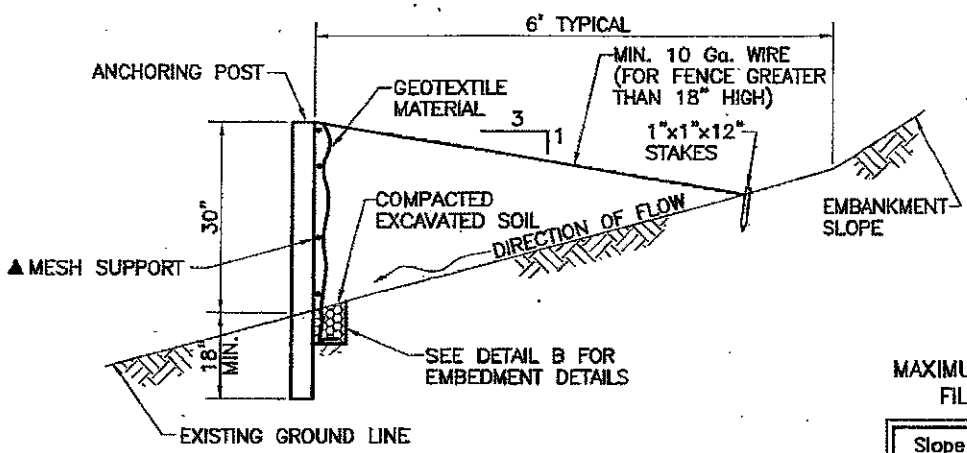

NOTE:

SILT BARRIER FENCE TO BE PLACED "ON THE CONTOUR"

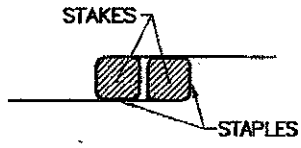

JOINING FENCE SECTIONS

TABLE A2
MAXIMUM SLOPE LENGTHS FOR FILTER FABRIC FENCES

Slope %	Max. Slope Length Above Fence
2	500
5	250
10	150
15	100
20	70
25	55
30	45
35	40
40	35
45	30
50	25

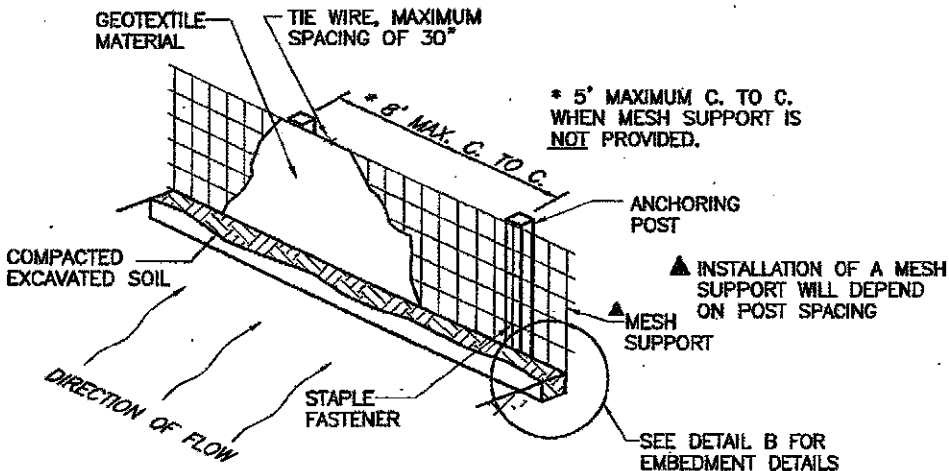

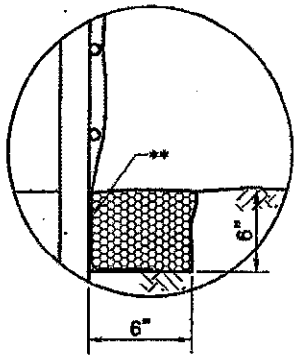

** EXTEND FABRIC 8" TO 12" INTO EXCAVATED TRENCH.

DETAIL B

N O T E S :

1. DETAILS FOR REFERENCE ONLY, FACILITIES TO BE DESIGNED IN ACCORDANCE WITH CURRENT MANUALS PUBLISHED BY PENNSYLVANIA DEPARTMENT OF ENVIRONMENTAL PROTECTION AND THE CONSERVATION DISTRICT.
2. FILTER FABRIC MUST BE INSTALLED AT LEVEL GRADE. BOTH ENDS OF EACH FENCE SECTION MUST BE EXTENDED UPSLOPE SO THAT THE BOTTOM OF THE FENCE SHALL END AT THE TOP OF FENCE ELEVATION.
3. SEDIMENT MUST BE REMOVED WHERE ACCUMULATIONS REACH 1/2 THE ABOVE-GROUND HEIGHT OF THE FENCE.
4. ANY FENCE SECTION WHICH HAS BEEN UNDERMINED OR OVERTOPPED MUST BE IMMEDIATELY REPAIRED TO ORIGINAL CONDITION.
5. STRAW BALES SHALL NOT BE USED.
6. SOURCE: PENNSYLVANIA DEPARTMENT OF ENVIRONMENTAL PROTECTION, EROSION AND SEDIMENTATION CONTROL STANDARD WORK SHEETS, 1/1996.

Scale: N.T.S.		
Drwn By:	Chkd By:	Appd By:
Filename: Collierdet-1.dwg		
Date: December 2008		

Township of Collier
Standard Details
Detail ES-1A
30" Silt Barrier Fence

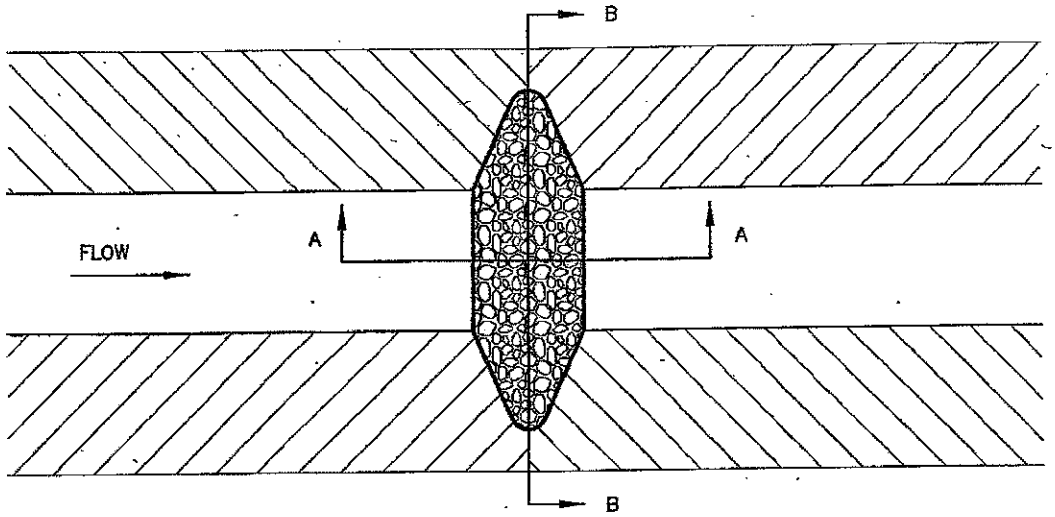

PLAN VIEW

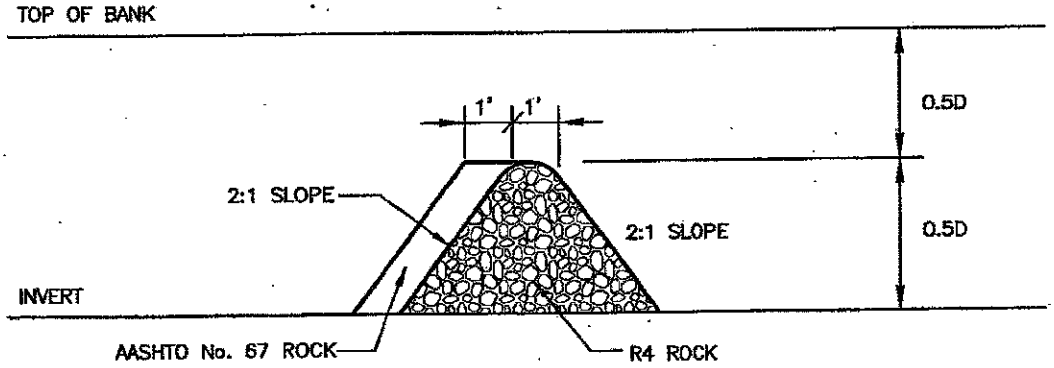

D = DEPTH OF WATER AT CHANNEL CAPACITY

TYPICAL SECTION A-A

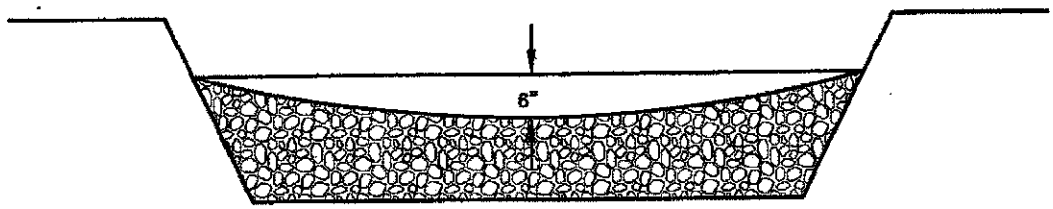

TYPICAL SECTION B-B

MAINTENANCE:
ROCK FILTERS WILL BE REMOVED WHEN CLOGGED WITH SEDIMENTS. EXISTING MATERIALS MUST BE WASHED COMPLETELY FREE OF ALL FOREIGN MATERIAL OR NEW ROCK USED TO REBUILD THE FILTER.

N O T E S :

1. DETAILS FOR REFERENCE ONLY, FACILITIES TO BE DESIGNED IN ACCORDANCE WITH CURRENT MANUALS PUBLISHED BY PENNSYLVANIA DEPARTMENT OF ENVIRONMENTAL PROTECTION AND THE CONSERVATION DISTRICT.
2. SOURCE: PENNSYLVANIA DEPARTMENT OF ENVIRONMENTAL PROTECTION, EROSION AND SEDIMENTATION CONTROL STANDARD WORK SHEETS, 1/1996.

Scale: N.T.S.		Township of Collier Standard Details
Drwn By:	Chkd By:	Appd By:
Filename: Collierdet-1.dwg		Detail ES-2 Rock Filter
Date: December 2008		

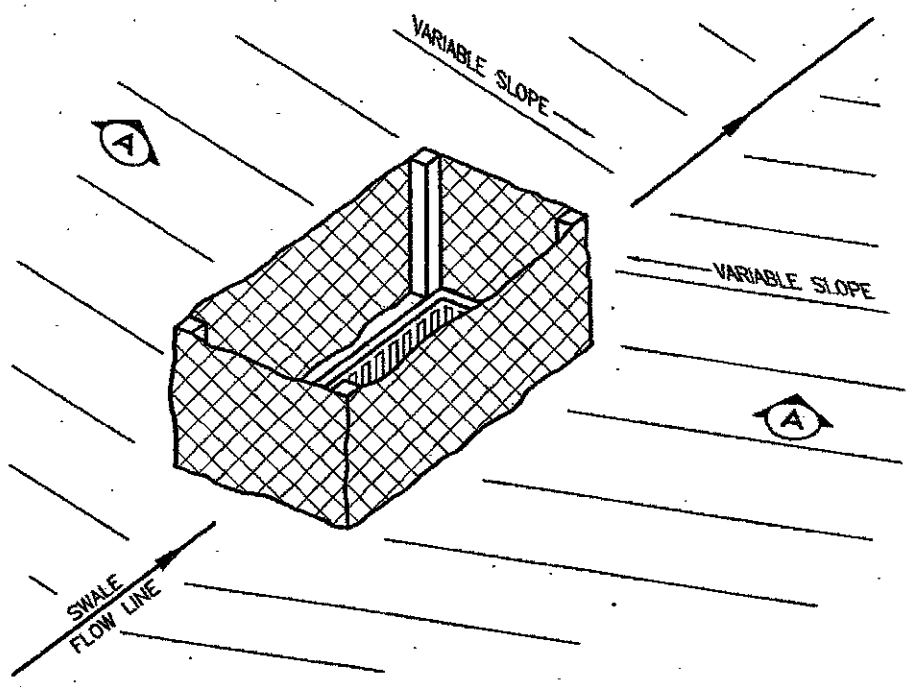

N O T E S :

1. DETAILS FOR REFERENCE ONLY, FACILITIES TO BE DESIGNED IN ACCORDANCE WITH CURRENT MANUALS PUBLISHED BY PENNSYLVANIA DEPARTMENT OF ENVIRONMENTAL PROTECTION AND THE CONSERVATION DISTRICT.
2. SILT BARRIER FENCE SHOULD BE LOCATED TO PREVENT THE INFILTRATION OF FINES OR SEDIMENT INTO THE INLET BOX. IF BACKFILL OPERATIONS HAVE NOT BEEN PERFORMED, THE SILT BARRIER FENCE SHALL BE LOCATED OUTSIDE THE AREA EXCAVATED FOR THE INLET BOX.
3. SOURCE: PENNSYLVANIA DEPARTMENT OF ENVIRONMENTAL PROTECTION, EROSION AND SEDIMENTATION CONTROL STANDARD WORK SHEETS, 1/1996.

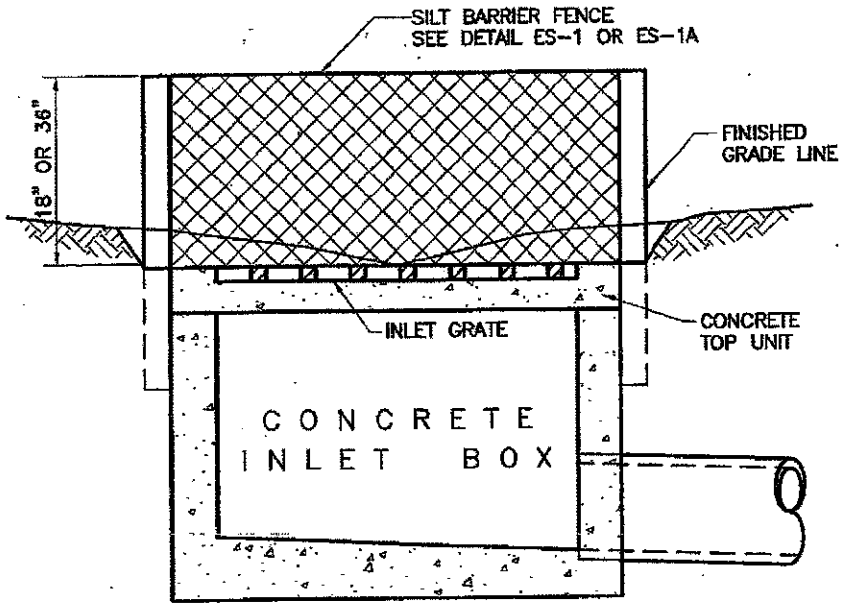

SECTION A–A

Scale: N.T.S.		Township of Collier Standard Details
Drwn By:	Chkd By:	Appd By:
Filename: Collierdet–1.dwg		Detail ES-3 Silt Barrier Fence for Inlet Protection
Date: December 2008		

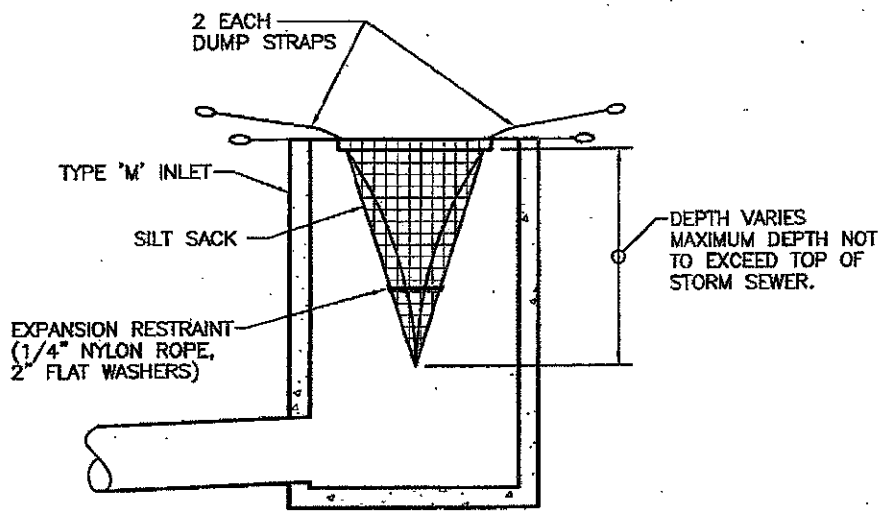

N O T E S :

1. DETAILS FOR REFERENCE ONLY, FACILITIES TO BE DESIGNED IN ACCORDANCE WITH CURRENT MANUALS PUBLISHED BY PENNSYLVANIA DEPARTMENT OF ENVIRONMENTAL PROTECTION AND THE CONSERVATION DISTRICT.
2. SILT SACK SHALL BE CONSTRUCTED AND MAINTAINED AS PER MANUFACTURER'S SPECIFICATIONS. (USE REGULAR SILT SACK)
3. OWNER SHALL SUBMIT MAINTENANCE SCHEDULE TO CONSERVATION DISTRICT FOR APPROVAL.
4. SOURCE: PENNSYLVANIA DEPARTMENT OF ENVIRONMENTAL PROTECTION, EROSION AND SEDIMENTATION CONTROL STANDARD WORK SHEETS, 1/1996.

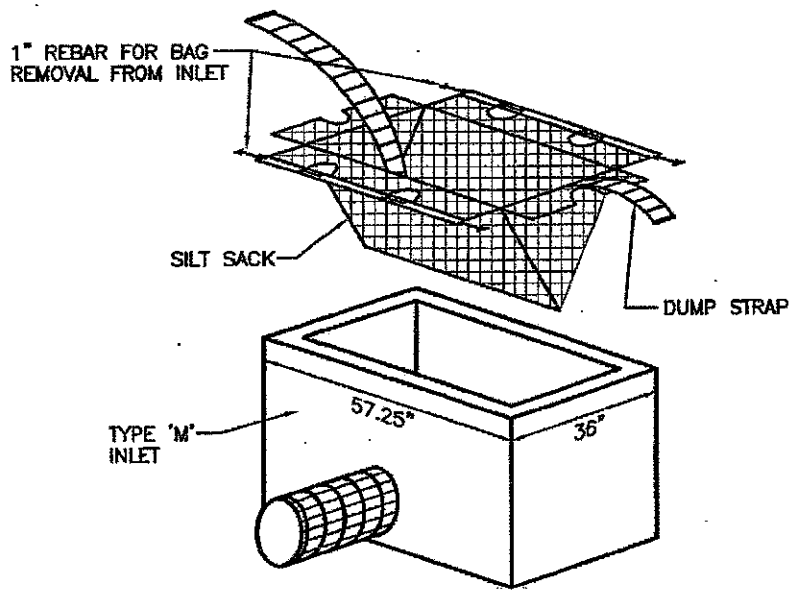

Scale: N.T.S.			Township of Collier Standard Details
Drwn By:	Chkd By:	Appd By:	Detail ES-4 Silt Sack
Filename: Collierdet-1.dwg			
Date: December 2008			

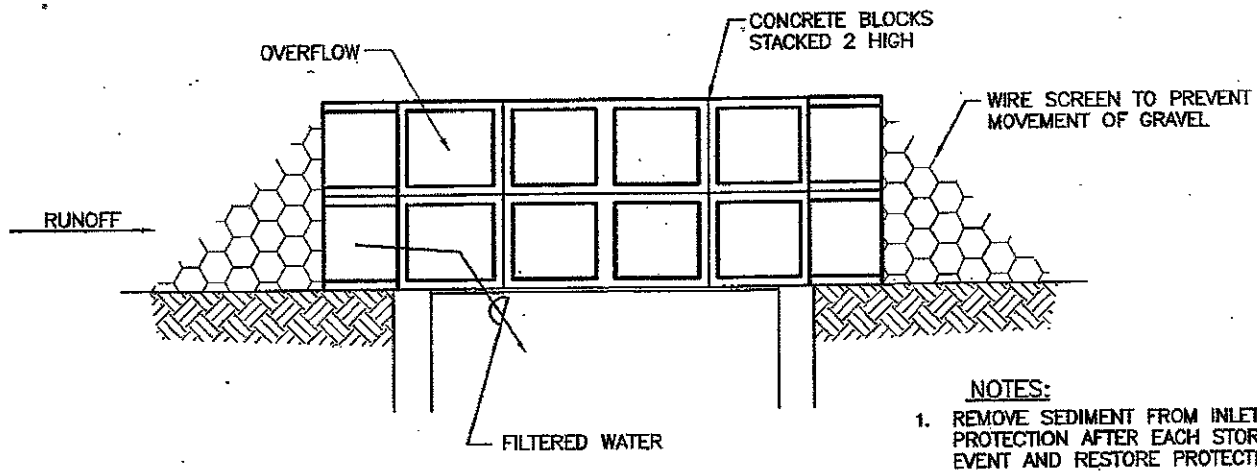

SECTION A–A

NOTES:

1. REMOVE SEDIMENT FROM INLET PROTECTION AFTER EACH STORM EVENT AND RESTORE PROTECTION.
2. TEMPORARY INLET PROTECTION MAY BE REMOVED AFTER PERMANENT STABILIZATION.

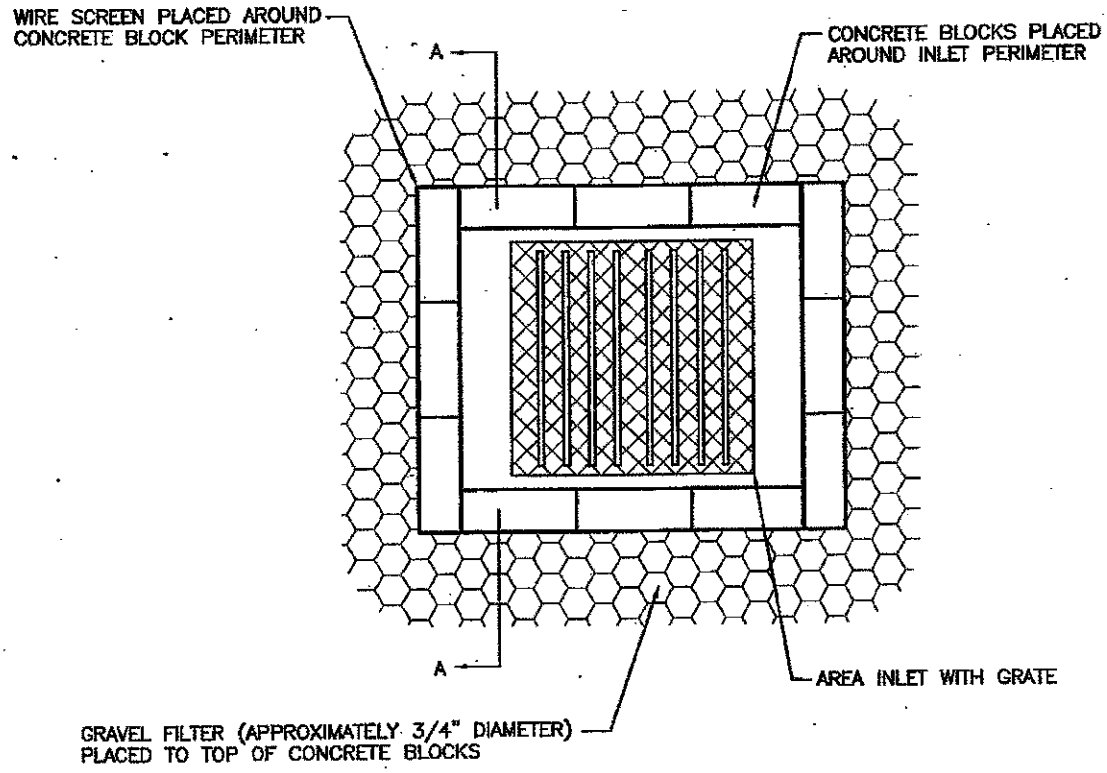

NOTES:

1. DETAILS FOR REFERENCE ONLY, FACILITIES TO BE DESIGNED IN ACCORDANCE WITH CURRENT MANUALS PUBLISHED BY PENNSYLVANIA DEPARTMENT OF ENVIRONMENTAL PROTECTION AND THE CONSERVATION DISTRICT.
2. GRAVEL FILTER MAY BE USED ON PAVEMENT OR BARE GROUND.
3. SOURCE : PA DEPARTMENT OF ENVIRONMENTAL PROTECTION EROSION AND SEDIMENTATION CONTROL STANDARD WORKSHEET'S, (JANUARY,1996)

Scale: N.T.S.		Township of Collier Standard Details
Drwn By:	Chkd By:	Appd By:
Filename: Collierdet–1.dwg		Detail ES-4A Inlet Sediment Filters
Date: December 2008		

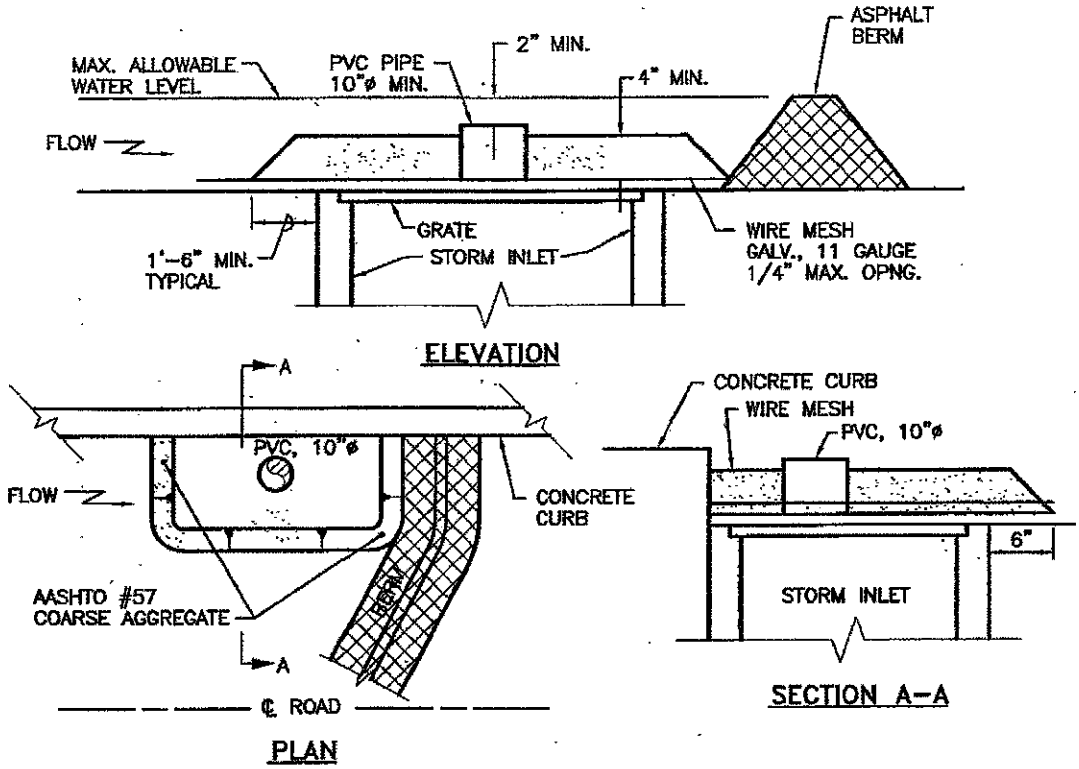

NOTES:

1. DETAILS FOR REFERENCE ONLY, FACILITIES TO BE DESIGNED IN ACCORDANCE WITH CURRENT MANUALS PUBLISHED BY PENNSYLVANIA DEPARTMENT OF ENVIRONMENTAL PROTECTION AND THE CONSERVATION DISTRICT.

2. FURNISH PLASTIC OR WIRE MESH FABRIC WITH SQUARE OPENINGS NO LARGER THAN 1/4". THE LENGTH AND WIDTH OF THE MESH IS TO BE 4 FT. GREATER THAN THE OUTSIDE DIMENSIONS OF THE INLET TO BE PROTECTED.

3. REMOVE SEDIMENT FROM INLET PROTECTION AFTER EACH STORM EVENT AND RESTORE PROTECTION.

4. 6" MINIMUM BERM TO BE MAINTAINED UNTIL ROADWAY SURFACE IS PAVED.

5. SOURCE : PA DEPARTMENT OF ENVIRONMENTAL PROTECTION EROSION AND SEDIMENTATION CONTROL STANDARD WORKSHEET'S, (JANUARY,1996)

Scale: N.T.S.		Township of Collier Standard Details
Drwn By:	Chkd By: / Appd By:	Detail ES-4B
Filename: Collierdet-1.dwg		Inlet Sediment Filters for Curbed Locations
Date: December 2008		

TEMPORARY SEED MIXTURE (ALL AREAS)

FORMULA AND SPECIES	% BY WEIGHT	MINIMUM % PURITY	MINIMUM % GERMINATION	MAX % WEED SEED	SEEDING RATE LBS. PER 1000 SY
FORMULA E • RYEGRASS VAR. KENTUCKY)	100	98	90	0.15	10.0

SPREAD SEED AS FOLLOWS:
FORMULA E – MARCH 15 TO JUNE 4
AUGUST 1 TO OCTOBER 15

SEEDING FORMULA MUST COMPLY WITH PaDOT FORM 408, SECTION 804

PERMANENT SEED MIXTURE (LAWN/YARD AREAS)

FORMULA AND SPECIES	% BY WEIGHT	MINIMUM % PURITY	MINIMUM % GERMINATION	MAX % WEED SEED	SEEDING RATE LBS. PER 1000 SY
FORMULA B					21.0 TOTAL
* PERENNIAL RYEGRASS MIXTURE	20	99	90	0.15	4.0
* CREEPING RED FESCUE OR CHEWING FESCUE	30	98	85	0.15	6.0
* KENTUCKY BLUEGRASS MIXTURE	50	98	80	0.20	11.0

SPREAD SEED AS FOLLOWS:
FORMULA B – MARCH 15 TO JUNE 4
AUGUST 1 TO OCTOBER 15

SEEDING FORMULA MUST COMPLY WITH PaDOT FORM 408, SECTION 804

PERMANENT SEED MIXTURE (NON–LAWN/YARD AREAS)

FORMULA AND SPECIES	% BY WEIGHT	MINIMUM % PURITY	MINIMUM % GERMINATION	MAX % WEED SEED	SEEDING RATE LBS. PER 1000 SY
FORMULA W, MODIFIED (Slopes > 3 to 1)					14.5 TOTAL
• TALL FESCUE (FESTUCA ARUNDINACEA VAR. KENTUCKY 31)	50	98	85	0.15	7.5
• BIRDSFOOT TREFOIL MIXTURE (LOTUS CORNICULATUS) A MIXTURE OF 1/2 VIKING AND 1/2 OF EITHER EMPIRE, NORCEN, OR LED.	40	96	80*	0.10	6.0
• REDTOP (AGORSTIS ALBA)	10	92	80	0.15	1.0
FORMULA D (Slopes < 3 to 1)					21.0 TOTAL
• TALL FESCUE(FESTUCA ARUNDINACES VAR. KENTUCKY)	70	98	85	0.15	15.0
• CREEPING RED FESCUE OR CHEWINGS FESCUE	30	98	85	0.15	6.0

SPREAD SEED AS FOLLOWS:
FORMULA W, MODIFIED – APRIL1 TO JUNE 15
– AUGUST 16 TO SEPTEMBER 15
FORMULA D – MARCH 15 TO JUNE 1
– AUGUST 1 TO OCTOBER 15

*MINIMUM 20% HARDSEED AND 60% NORMAL SPROUTS ABOVE TAKEN FROM PaDOT FORM 408, SECTION 804.

MULCHES

HAY: TIMOTHY HAY, MIXED CLOVER AND TIMOTHY HAY, OR OTHER ACCEPTABLE NATIVE OR FORAGE GRASSES, WELL–CURED TO LESS THAN 20% MOISTURE CONTENT, BY WEIGHT.

STRAW: EITHER WHEAT OR OAT STRAW, REASONABLY FREE OF VIABLE SEED, WELL–CURED TO LESS THAN 20% MOISTURE CONTENT, BY WEIGHT.

PLACE MULCH IMMEDIATELY AFTER SEEDING OR WITHIN 48 HOURS AFTER SEEDING IS COMPLETED. PLACE HAY OR STRAW UNIFORMLY, IN A CONTINUOUS BLANKET, AT A MINIMUM RATE OF 1200 POUNDS PER 1000 SQ. YDS. (3 TON PER ACRE). A MULCH BINDER SHALL BE APPLIED ON ALL SLOPES GREATER THAN 3:1. THE MULCH BINDER SHALL BE RECYCLED CELLULOSE FIBER CONFORMING TO PaDOT FORM 408, SECTION 805.2(b). THE APPLICATION RATE FOR THE RECYCLED CELLULOSE FIBER BINDER SHALL BE 160 lbs/1,000 SQ. YDS.

MULCH MUST COMPLY WITH PaDOT FORM 408, SECTION 804

FERTILIZER AND LIME

FERTILIZER: APPLY FERTILIZER OF ANALYSIS 10–20–20 AT A RATE OF 900–1000 POUNDS PER ACRE.
LIME: APPLY LIME AT A RATE OF 4 TO 6 TONS PER ACRE.

NOTES:

1. ABOVE RATES MAY VARY IF SOIL TEST COMPLETED.
2. DO NOT FERTILIZE FORMULA C SEED MIXTURE.
3. ALL LAWN AREAS SHALL HAVE A MINIMUM OF 4" TOPSOIL INSTALLED.

Scale: N.T.S.		Township of Collier Standard Details
Drwn By:	Chkd By: / Appd By:	Detail ES-5 Seeding Schedule
Filename: Collierdet–1.dwg		
Date: December 2008		

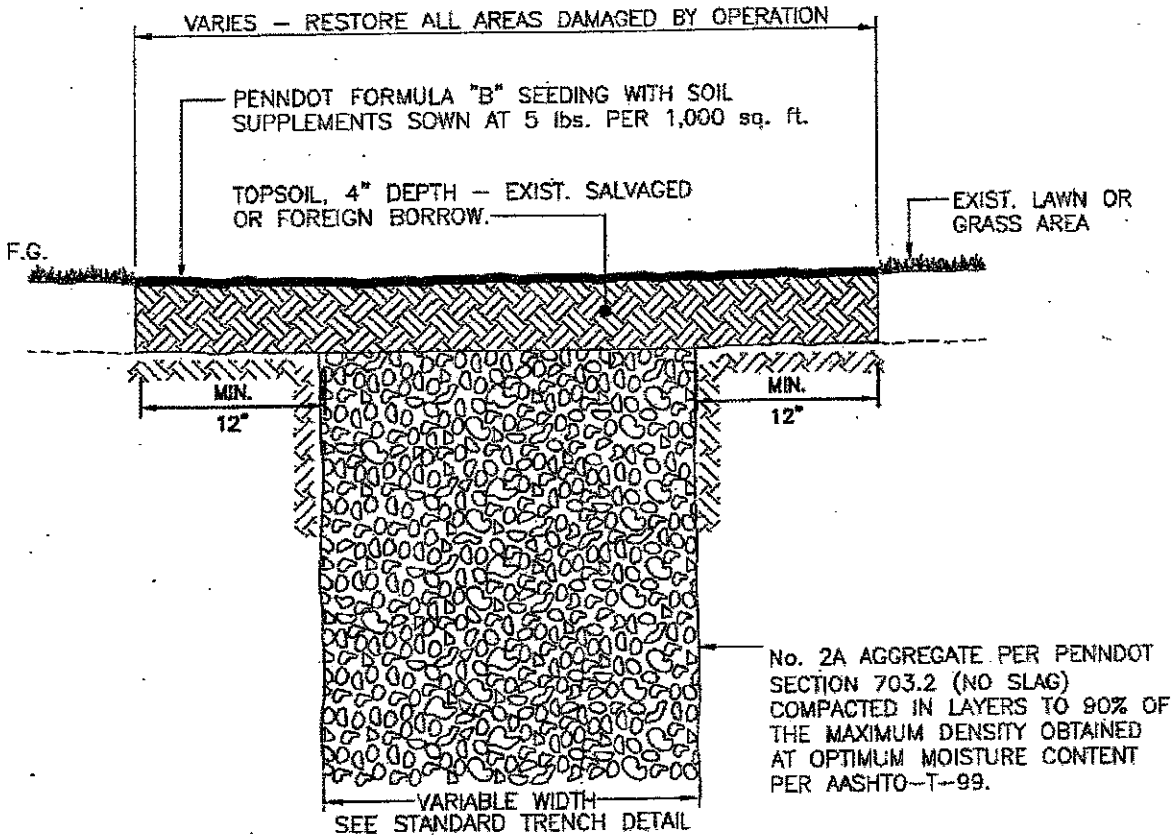

NOTE:

1. STABILIZE AREA WITH HAY OR STRAW –100% COVERAGE FOR EROSION CONTROL

2. APPLY STRAW OR HAY MULCH AT A RATE OF 100 lbs. PER 1,000 sq. ft. MINIMUM.

Scale: N.T.S.		Township of Collier Standard Details
Drwn By:	Chkd By:	Appd By:
Filename: Collierdet–1.dwg		Detail ES-6 Lawn and Grass Area Restoration
Date: December 2008		

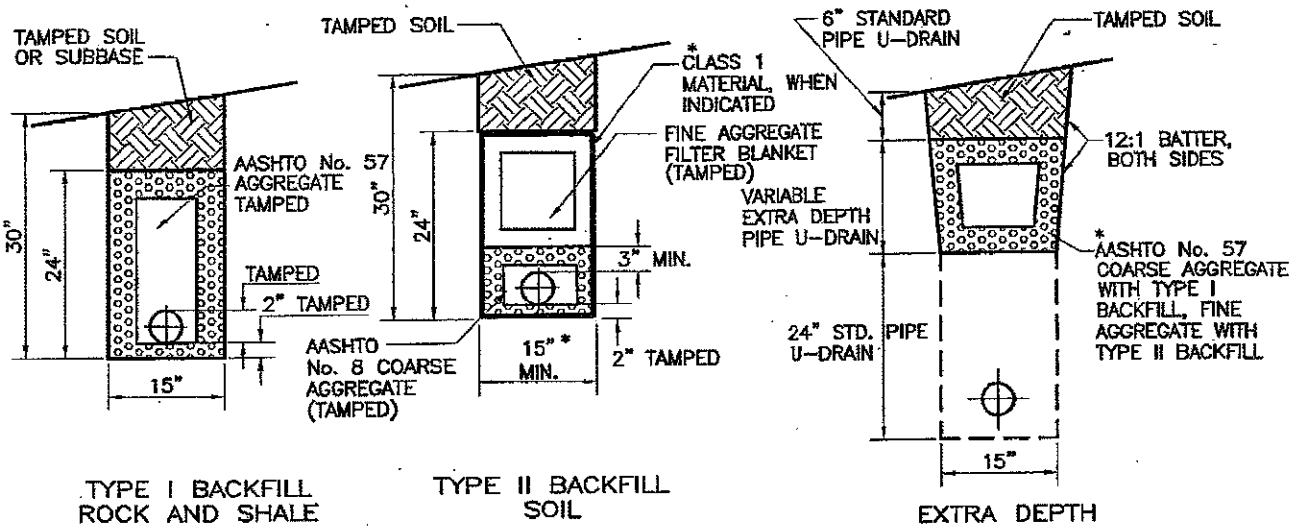

NOTES:

SLAG IS NOT PERMITTED AS BACKFILL.

100% STONE BACKFILL IS REQUIRED FULL WIDTH OF RIGHT-OF-WAY.

PIPE UNDERDRAIN

N. T. S.

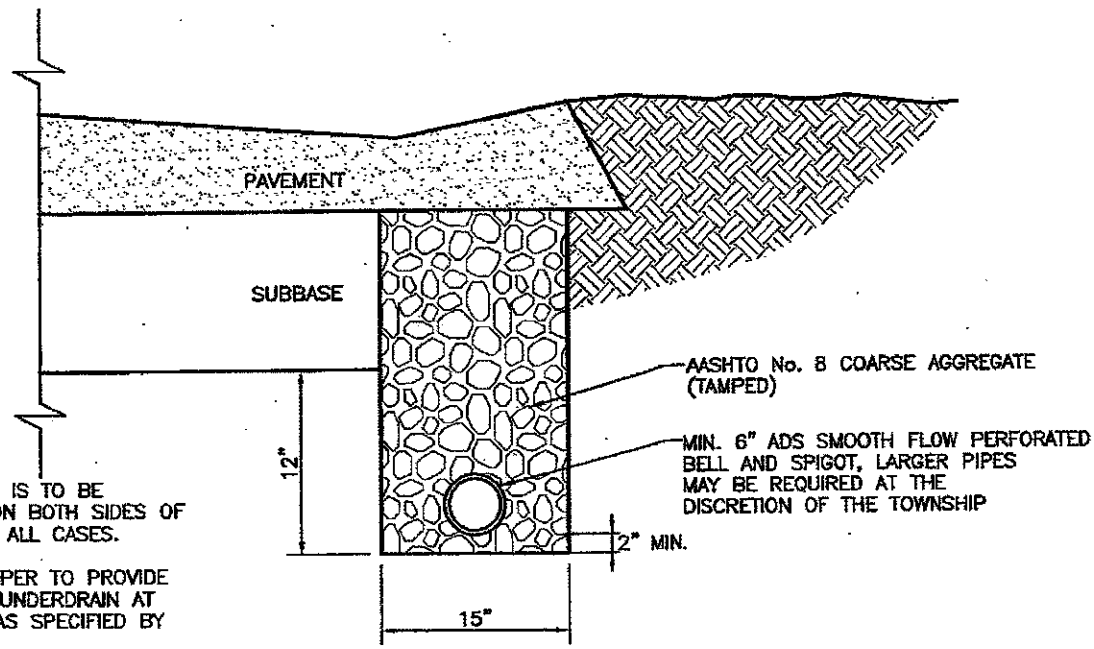

NOTES:

1. UNDERDRAIN IS TO BE INSTALLED ON BOTH SIDES OF CARTWAY IN ALL CASES.
2. THE DEVELOPER TO PROVIDE ADDITIONAL UNDERDRAIN AT LOCATIONS AS SPECIFIED BY TOWNSHIP.
3. SLAG IS NOT PERMITTED AS BACKFILL.
4. 100% STONE BACKFILL IS REQUIRED FULL WIDTH OF RIGHT-OF-WAY.

PAVEMENT BASE DRAIN

N. T. S.

Scale: N.T.S.			Township of Collier Standard Details
Drwn By:	Chkd By:	Appd By:	Detail RSD-1
Filename: Collierdet-1.dwg			Pipe Underdrain/Pavement Base Drain
Date: December 2008			

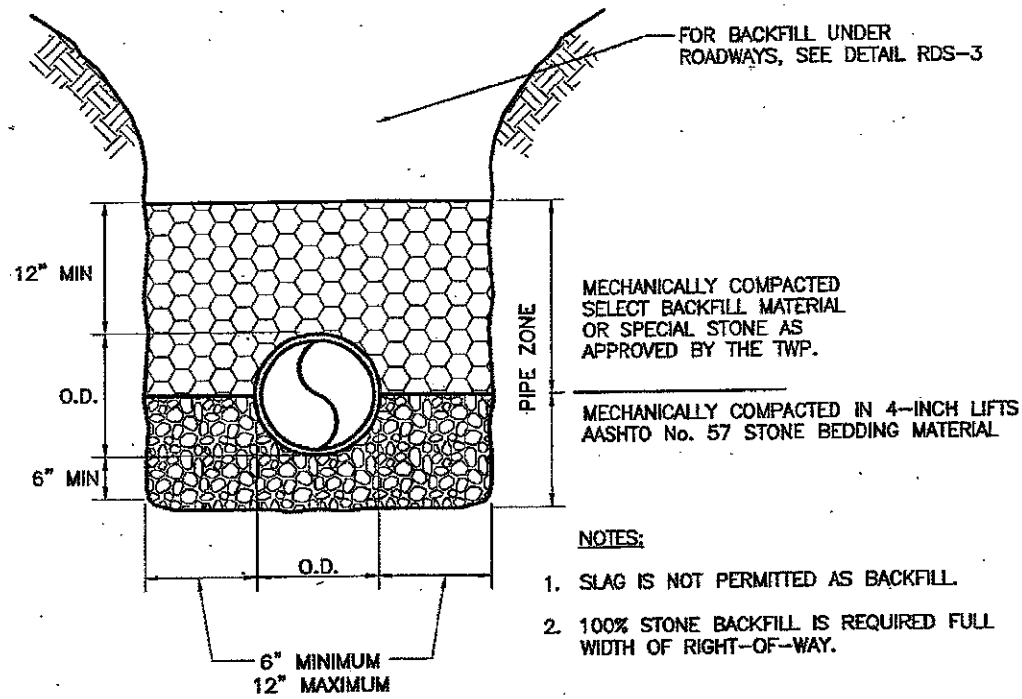

NOTES:

1. SLAG IS NOT PERMITTED AS BACKFILL.
2. 100% STONE BACKFILL IS REQUIRED FULL WIDTH OF RIGHT-OF-WAY.

REINFORCED CONCRETE PIPE
TYPICAL BEDDING AND PIPE ZONE
N. T. S.

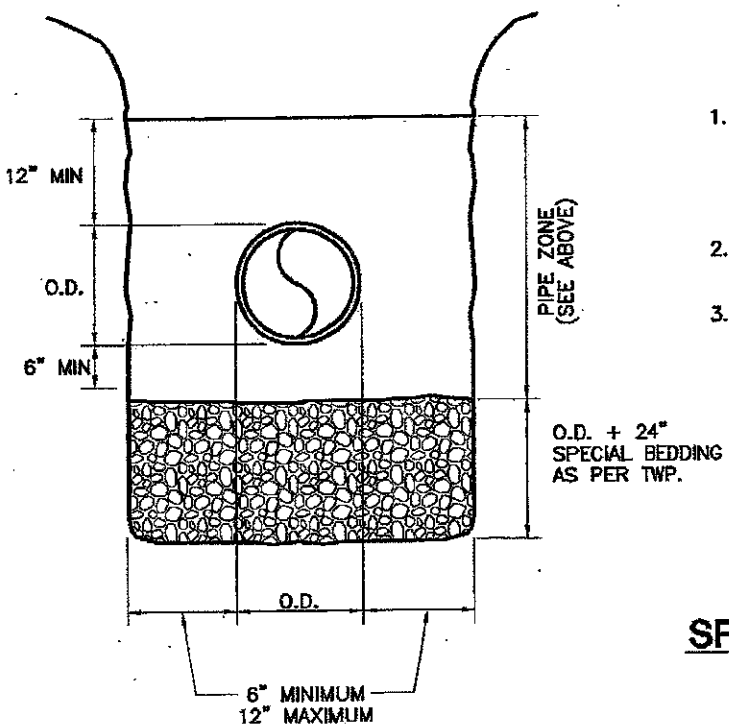

NOTES:

1. SPECIAL BEDDING MAY BE REQUIRED BY THE TOWNSHIP IF FIELD CONDITIONS OR LOADS WARRANT THE ADDITIONAL BEDDING.
2. SLAG IS NOT PERMITTED AS BACKFILL.
3. 100% STONE BACKFILL IS REQUIRED FULL WIDTH OF RIGHT-OF-WAY.

SPECIAL BEDDING
N.T.S.

Scale:		N.T.S.	Township of Collier Standard Details
Drwn By:	Chkd By:	Appd By:	Detail RSD-2
Filename:	Collierdet-1.dwg		Typical Bedding for Pipe Zone for RCP/Special Bedding
Date:	December 2008		

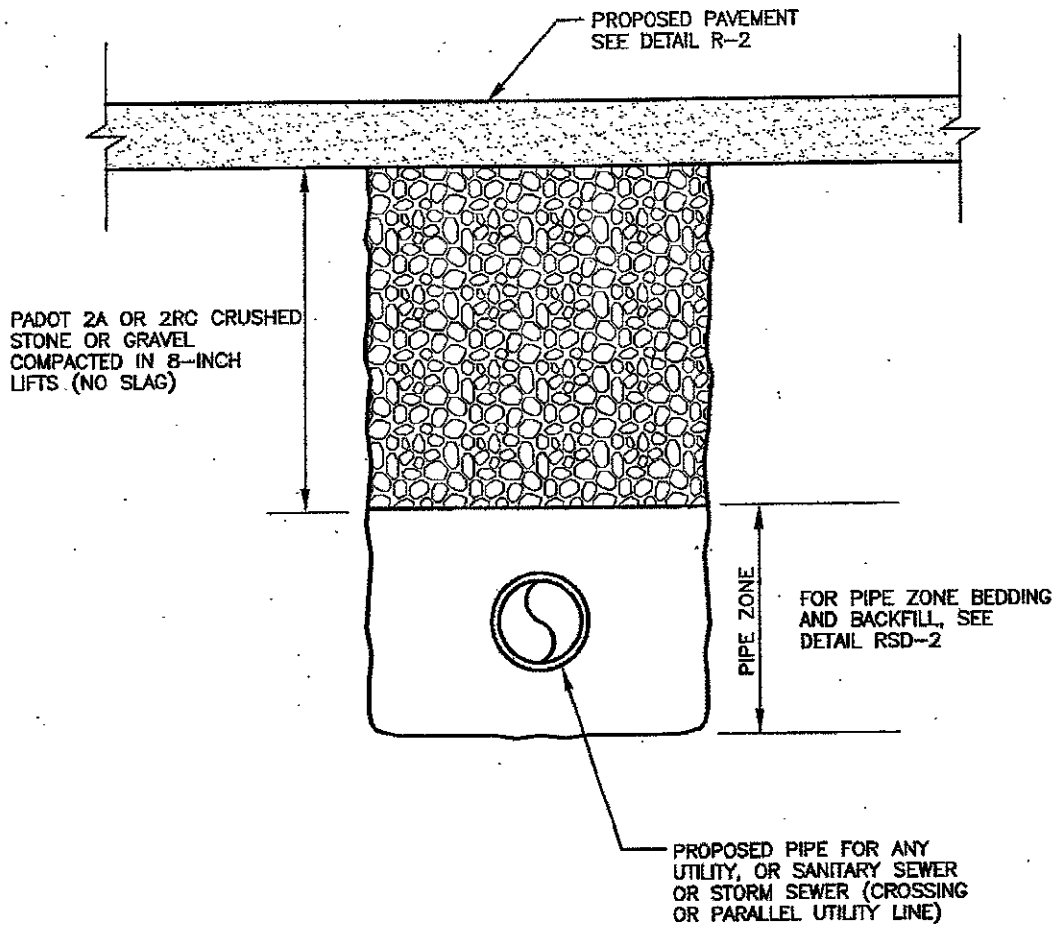

TABLE
REQUIRED SPACING AND MATERIALS FOR TRENCH PLUGS

TRENCH SLOPE (%)	SPACING (ft)	PLUG MATERIAL
< 5	*	*
5 – 15	500	**EARTH FILLED SACKS
15 – 25	300	**EARTH FILLED SACKS
25 – 35	200	**EARTH FILLED SACKS
35 – 100	100	**EARTH FILLED SACKS
> 100	50	CEMENT FILLED BAGS (WETTED)

* TRENCH PLUGS ARE REQUIRED AT ALL STREAM, RIVER OR WATER-BODY CROSSINGS REGARDLESS OF TRENCH SLOPE. OTHERWISE NOT REQUIRED.

** TOPSOIL MAY NOT BE USED TO FILL SACKS.

NOTES:

1. SLAG IS NOT PERMITTED AS BACKFILL.
2. 100% STONE BACKFILL IS REQUIRED FULL WIDTH OF RIGHT-OF-WAY.
3. SOIL PLUGS SPACING, SEE TABLE.
4. ALL JOINTS SHALL BE WATER TIGHT JOINTS, UNLESS APPROVED BY TOWNSHIP.

Scale: N.T.S.		Township of Collier Standard Details
Drwn By:	Chkd By:	Appd By:
Filename: Collierdet-1.dwg		Detail RSD-3
Date: December 2008		Trench Backfill fort Proposed Roads and Streets

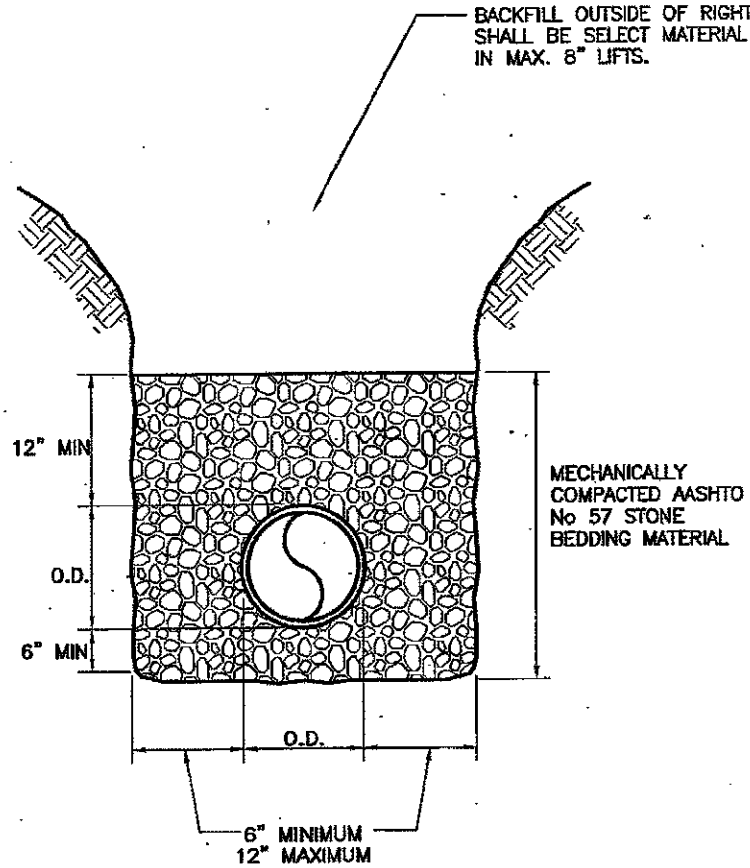

NOTES:

1. AT TRANSITION FROM RCP TO CPP, PROVIDE INLET OR MANHOLE.
2. SLAG IS NOT PERMITTED AS BACKFILL.
3. 100% STONE BACKFILL IS REQUIRED FULL WIDTH OF RIGHT-OF-WAY.

POLYETHYLENE PIPE SPECIFICATIONS

1. PIPE AND FITTINGS SHALL BE MADE OF POLYETHYLENE COMPOUNDS WHICH MEET OR EXCEED THE REQUIREMENTS OF TYPE III, CATEGORY 4 OR 5, GRADE P33 OR P34, CLASS C PER ASTM D-1248 WITH THE APPLICABLE REQUIREMENTS DEFINED IN ASTM D-1248.
2. MIN. COVER IS TO BE 2 FT. WITH AASHTO No. 57 STONE A MIN. OF 12" ABOVE THE TOP OF PIPE. IF THE PIPE IS TO BE LAID UNDER DRIVEWAYS, STREETS OR PARKING AREAS WITH MINIMUM COVER, THE 2 FEET SHALL BE PADOT 2A STONE. MAXIMUM COVER OVER THE PIPE IS NOT TO EXCEED 30 FEET.
3. MANNING'S "n" FOR DESIGN SHALL BE 0.012 FOR SMOOTH INTERIOR, AND SHALL BE 0.018 FOR SIZES UP TO AND INCLUDING 15", AND 0.020 FOR SIZES FROM 18" UP TO AND INCLUDING 36" FOR CORRUGATED INTERIOR.
4. POLYETHYLENE PIPE SHALL BE IN ACCORDANCE WITH PENNDOT FORM 408, SECTION 601.

Scale: N.T.S.		Township of Collier Standard Details
Drwn By:	Chkd By:	Appd By:
Filename: Collierdet-1.dwg		Detail RSD-4 Polyethylene Pipe Specifications
Date: December 2008		

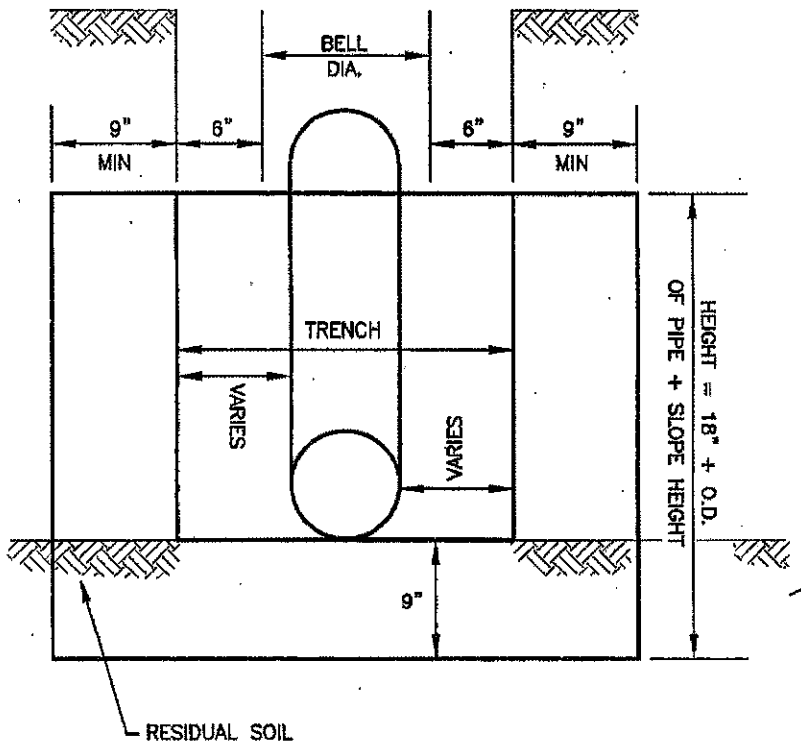

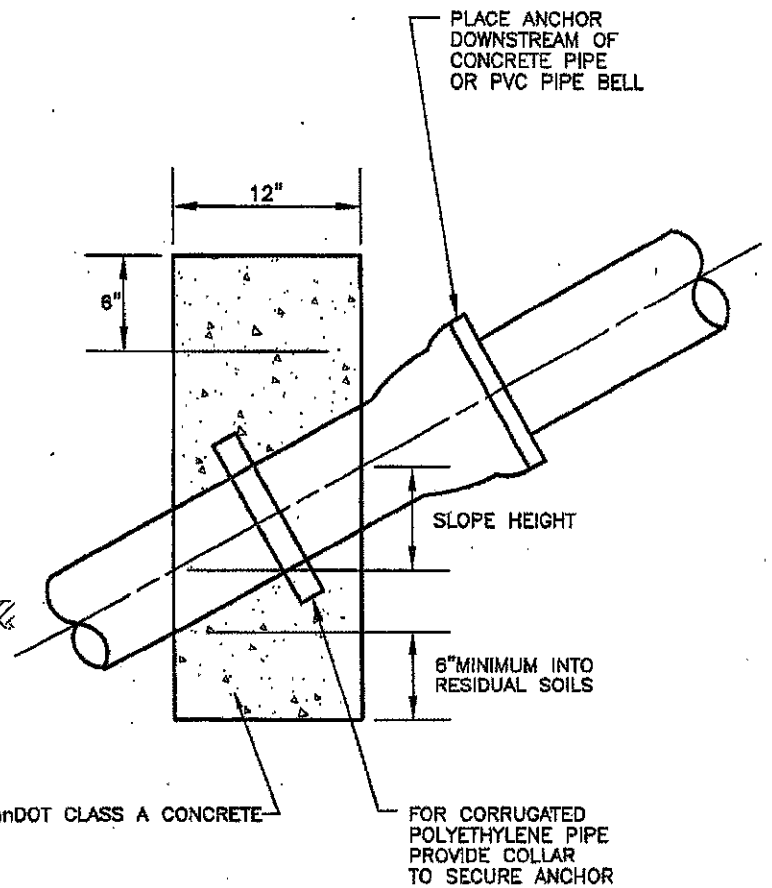

SPACING REQUIRED

% GRADE	DISTANCE CENTER TO CENTER
20% TO 30%	36' C.C.
30% TO 50%	24' C.C.
50% +	18' C.C.

Township of Collier
Standard Details
Detail RSD-5
Pipe Anchor

Scale: N.T.S.
Drwn By:
Chkd By:
Appd By:
Filename: Colliercdet-1.dwg
Date: December 2008

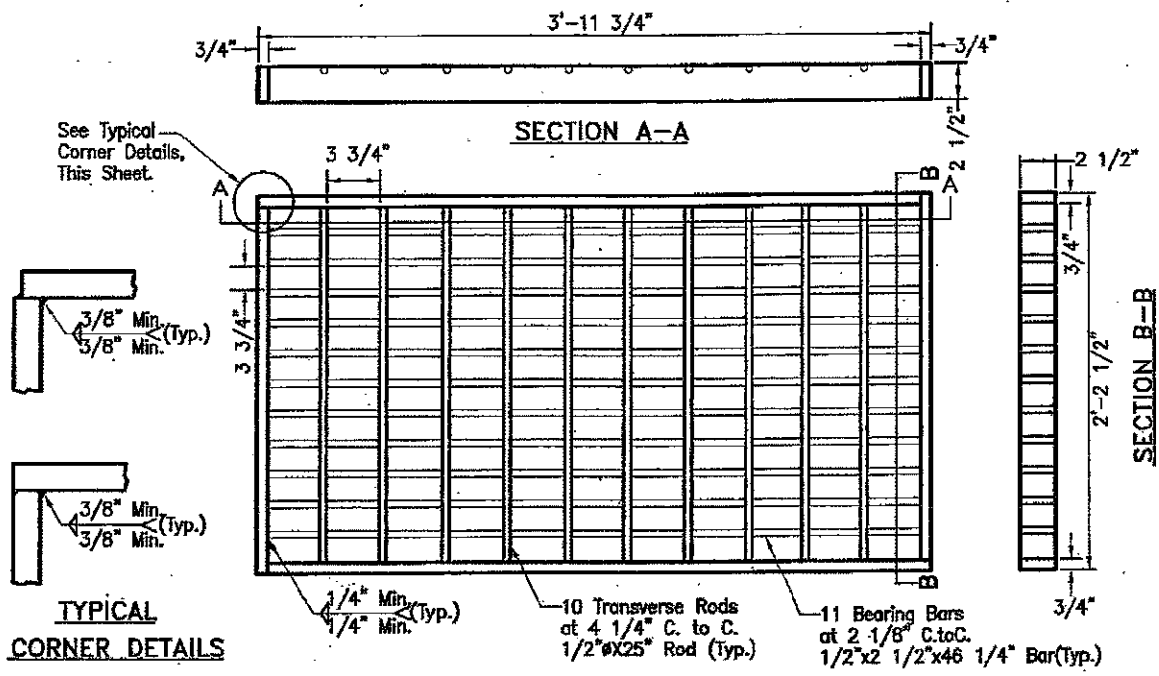

STRUCTURAL STEEL GRATE
BICYCLE SAFE

- Corner configuration details are fabricator's responsibility and shall be approved.

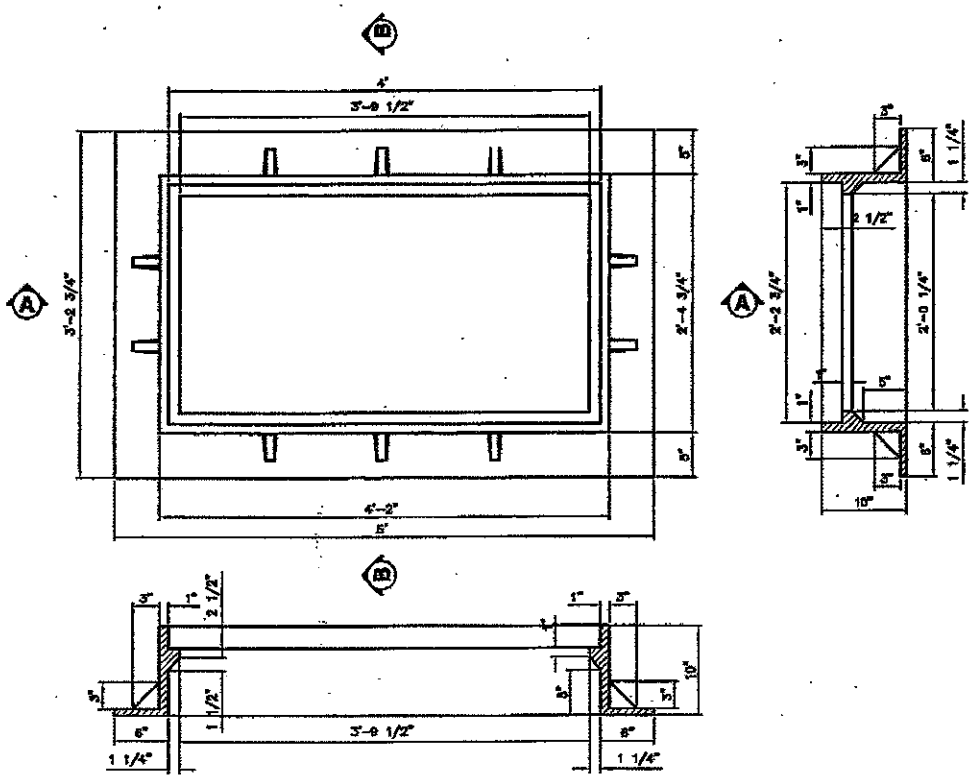

INLET FRAME
N. T. S.

Notes:

1. This sheet depicts the dimensions required for uniformity and interchangeability. It does not include details required for fabrication or manufacturing. Only grates supplied by a manufacturer listen in Bulletin 15 shall be permitted.

2. Weld structural steel grates in accordance with the requirements of Publication 408, Section 1105.03(R).

3. Provide transverse bars, meeting the requirements of Publication 408.

4. Provide structural steel grates with the grate spacers located flush along the top surface of the grate.

5. Do not use cast iron grates within the travel lanes. These grates are permitted at the edge of outside shoulders, swales, wide median swales and infield areas that are outside the travel lanes or curb to curb roadways.

6. SOURCE : PA DOT Standards for Roadway Construction. (latest edition)

Scale:	N.T.S.		Township of Collier Standard Details
Drwn By:	Chkd By:	Appd By:	Detail RSD-6
Filename:	Collierdet-1.dwg		Type-M Inlet (Frame and Bicycle Safe Grate)
Date:	December 2008		

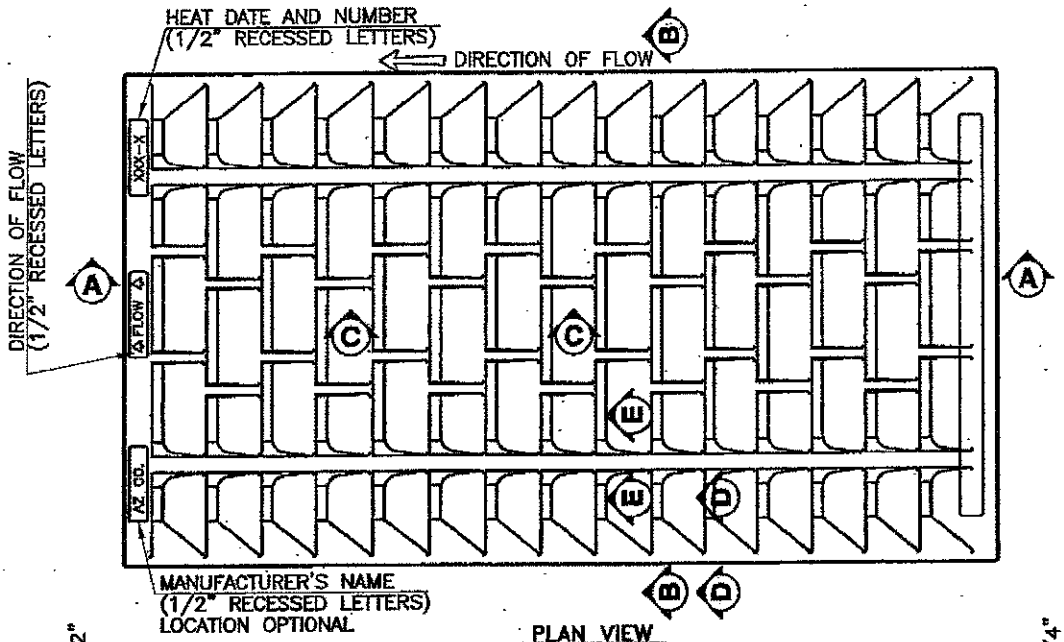

PLAN VIEW

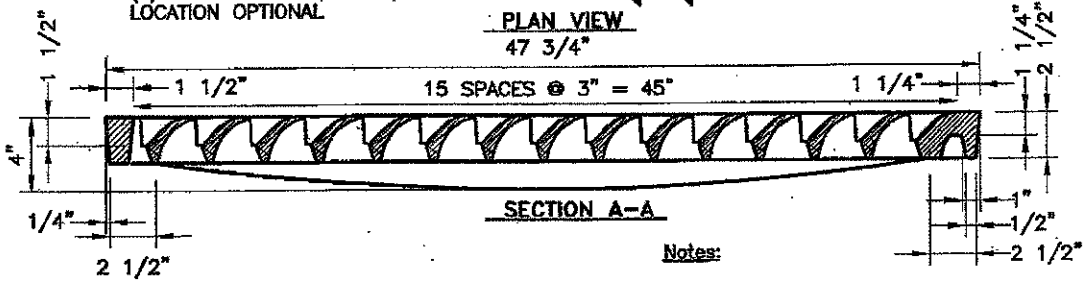

SECTION A–A

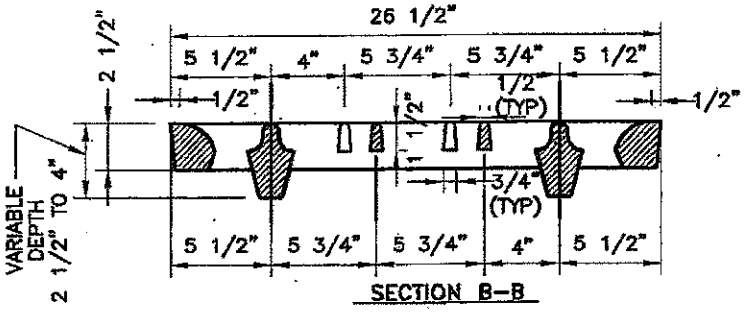

SECTION B–B

Notes:

1. Provide materials and construction in accordance with the requirements of Publication 408, Sections 605, 606 and 714. Only grates and grate adjustment systems supplied by a manufacturer listed in Bulletin 15 shall be permitted. For a Bulletin 15 listing, submit a 22 x 34" reproducible shop drawing for review and approval.
2. Install vane grates with curve vanes facing the direction of flow.
3. Provide 1/8" radius (typical) for all fillets and rounds, unless noted.
4. Grate shall be (1–piece) PADOT approved as listed in Bulletin 15.
5. Source: PADOT Standards for Roadway Construction (latest edition).

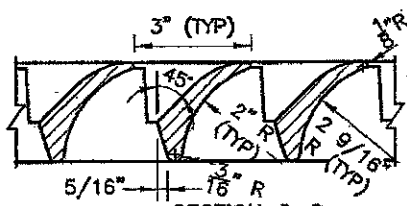

SECTION C–C

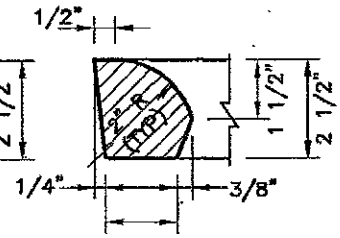

SECTION D–D

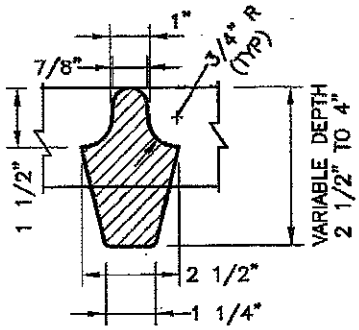

SECTION E–E

Scale: N.T.S.		
Drwn By:	Chkd By:	Appd By:
Filename: Collierdet–1.dwg		
Date: December 2008		

Township of Collier
Standard Details
Detail RSD-6A
Type-M Inlet (Cast Iron Vane Grate)

NOTES:

1. Construct in accordance with the requirements of Publication 408, Section 605, for Cast-in-Place units and Section 713.2 for Precast Cement Concrete units.
2. Precast concrete inlet boxes may be used in lieu of cast-in-place boxes shown. Only precast inlet boxes supplied by a manufacturer listed in PennDOT Bulletin 15 will be permitted.
3. Provide inlet boxes with 24" X 45 1/2" standard opening to accommodate the standard top components.
4. Provide 6" inlet walls, unless otherwise indicated, for concrete construction.
5. Inlets that exceed the maximum height, as shown, will require a special design.
6. Do not extend pipe block-outs into the base when base is not monolithic with the inlet walls.
7. Locate pipe or pipes, as indicated, with the inlet bottom shaped to channel the flow toward the outlet pipe.
8. Place precast inlet boxes on a properly prepared base as shown in Detail B.
9. Construct inlets that exceed 5 feet in height with steps similar to manholes. See RC-39.
10. Place #4 reinforcement bars, minimum 12 inches long, space at 12 inches C. to C., as dowels between the inlet base and walls when the concrete walls and inlet base are no constructed monolithically. The dowels may be eliminated if the alternate joint shown in Detail A is constructed.
11. Brick or concrete block inlets shall not be permitted.
12. All inlets for pipes > 36"ø shall have expanded type inlet box, design of which shall be approved by the township engineer.
13. Construct in accordance with PennDOT specifications.
14. Source: PennDOT Standards for Roadway Construction. (latest edition)
15. Storm sewer drop connections from invert of outflow pipe to invert of inflow pipes shall be a maximum of 2 ft.

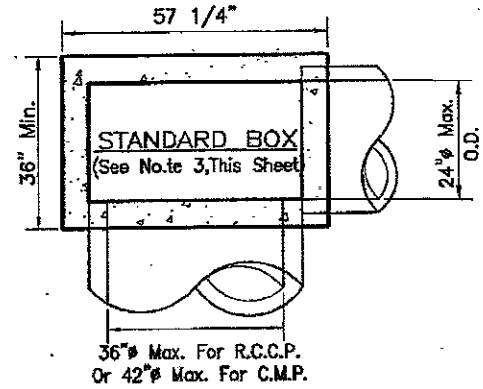

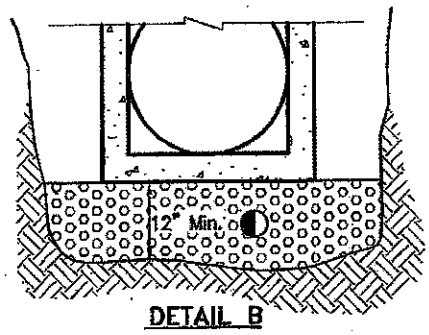

DETAIL B
PRECAST INLET BOX
BASE PREPARATION

◐ Place material meeting the requirements of Publication 408, Section 350.2, in 4 inch layers, compacted to a density satisfactory to the Engineer, incidental to the inlet pay item.

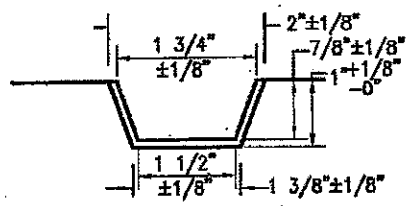

DETAIL A
ALTERNATE JOINT

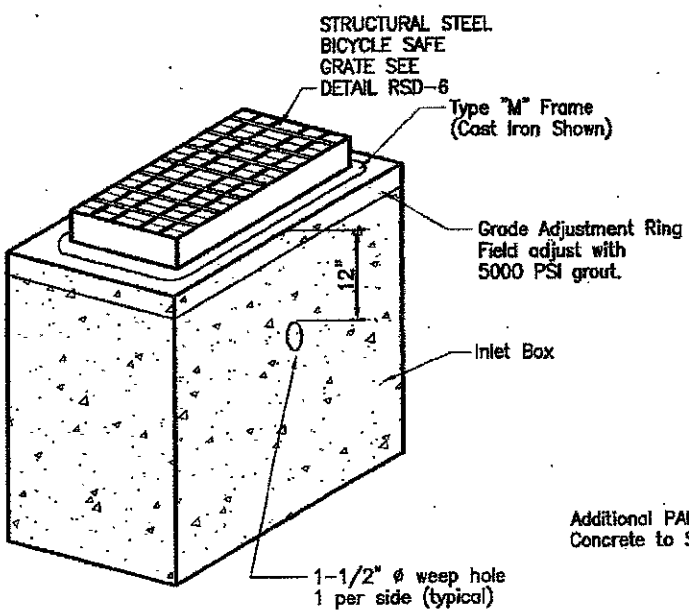

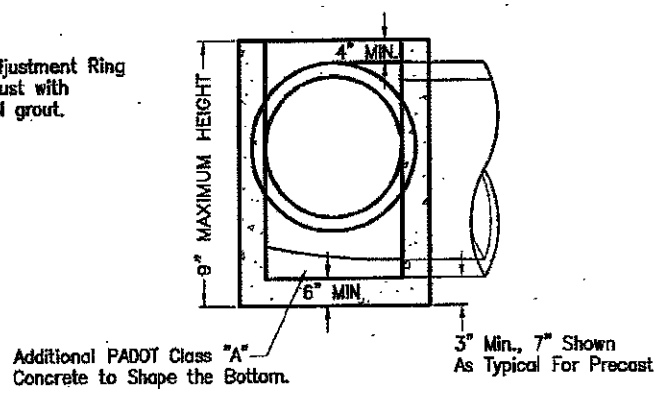

SECTION A-A

Scale: N.T.S.		
Drwn By:	Chkd By:	Appd By:
Filename: Collierdet-1.dwg		
Date: December 2008		

Township of Collier
Standard Details
Detail RSD-6B
Type-M Inlet (Box)

NOTES:

1. ALL CONCRETE SHALL BE CLASS AA CONCRETE, 4000 PSI, 5% AIR ENTRAINED
2. MANHOLE BARREL JOINTS TO BE SEALED WITH 1" DIA. FLEXIBLE BUTYL RUBBER JOINT SEALANT, USE 1/2" DIA. FOR FRAME AND COVER
3. FRAME AND COVER TO BE ANCHORED WITH 2-3/4" DIA. S.S. ANCHOR BOLTS SET 6-INCHES INTO CONCRETE
4. LIFTING HOLES TO BE POINTED WITH NON-SHRINK GROUT, AND LEFT WATERTIGHT, NEAT AND SMOOTH
5. MAXIMUM ADJUSTMENT TO FINISHED GRADE USING PRECAST GRADE RINGS SHALL NOT EXCEED NINE INCHES (9")
6. PRECAST SECTIONS SHALL CONFORM TO ASTM C-478 AS REVISED
7. MANHOLE INVERT SHALL BE CONCRETE TO THE SPRING LINE OF PIPE WITH SIDES SLOPING 1/2" TO 1'-0" TO INSIDE FACE OF PRECAST BASE SECTION
8. IF THIS DIMENSION IS 3'-3", USE PRECAST SLAB TOP DESIGNED TO MEET LOAD CONDITIONS
9. PROVIDE PENN DOT CERTIFICATE ON ALL MATERIALS USED ON THE SITE
10. STORM SEWER DROP CONNECTIONS FROM INVERT OF OUTFLOW PIPE TO INVERT OF INFLOW PIPES SHALL BE A MAXIMUM OF 2 FT.
11. PRECAST CONCRETE MANHOLES MAY BE USED IN LIEU OF CAST-IN-PLACE MANHOLES. ONLY PRECAST MANHOLES SUPPLIED BY A MANUFACTURER LISTED IN PennDOT BULLETIN 15 WILL BE PERMITTED.

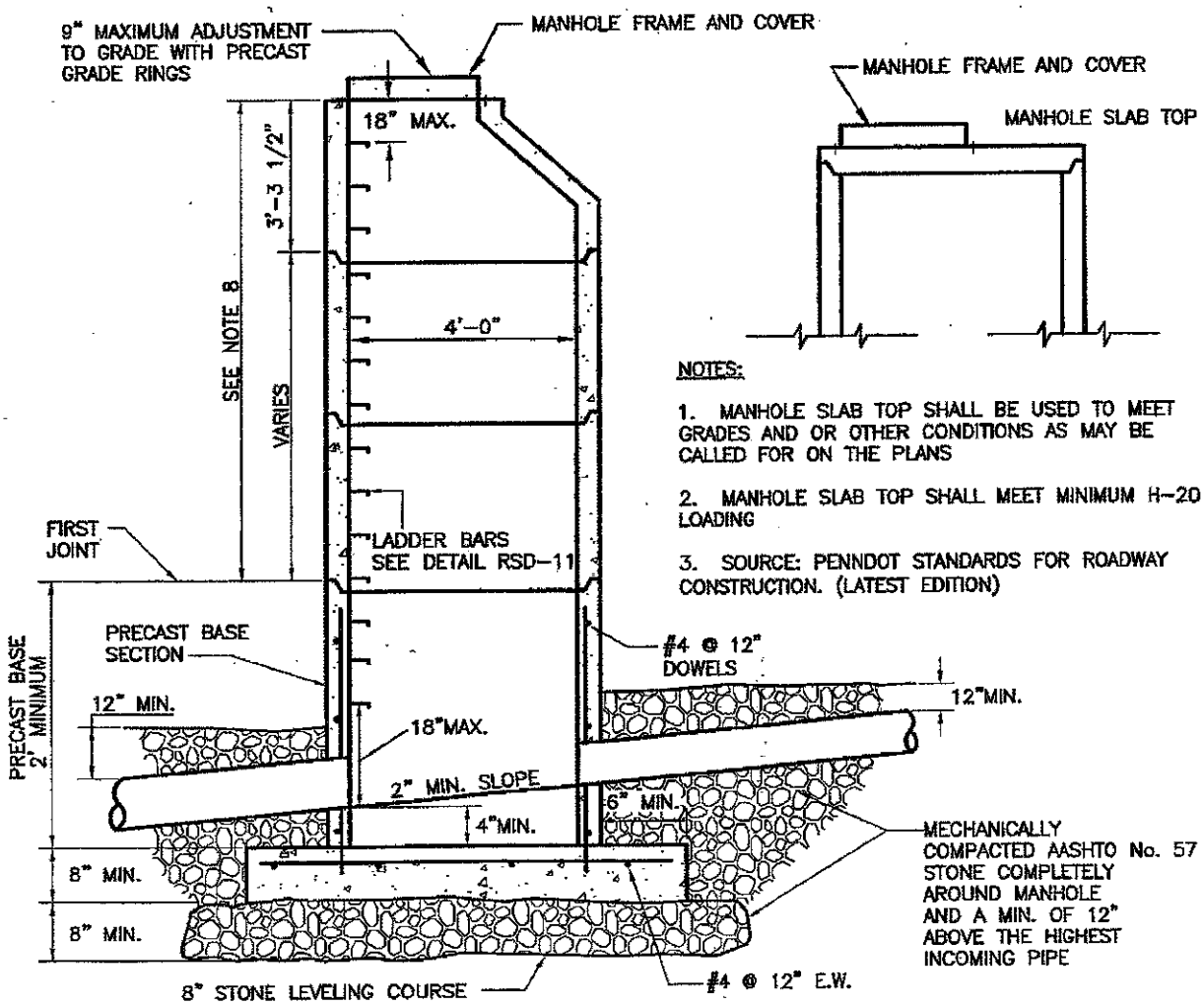

NOTES:

1. MANHOLE SLAB TOP SHALL BE USED TO MEET GRADES AND OR OTHER CONDITIONS AS MAY BE CALLED FOR ON THE PLANS
2. MANHOLE SLAB TOP SHALL MEET MINIMUM H-20 LOADING
3. SOURCE: PENNDOT STANDARDS FOR ROADWAY CONSTRUCTION. (LATEST EDITION)

Scale: N.T.S.			Township of Collier Standard Details
Drwn By:	Chkd By:	Appd By:	Detail RSD-7
Filename: Collierdet-1.dwg			Precast Concrete Manhole (8" to 18")-Manhole Slab Top
Date: December 2008			

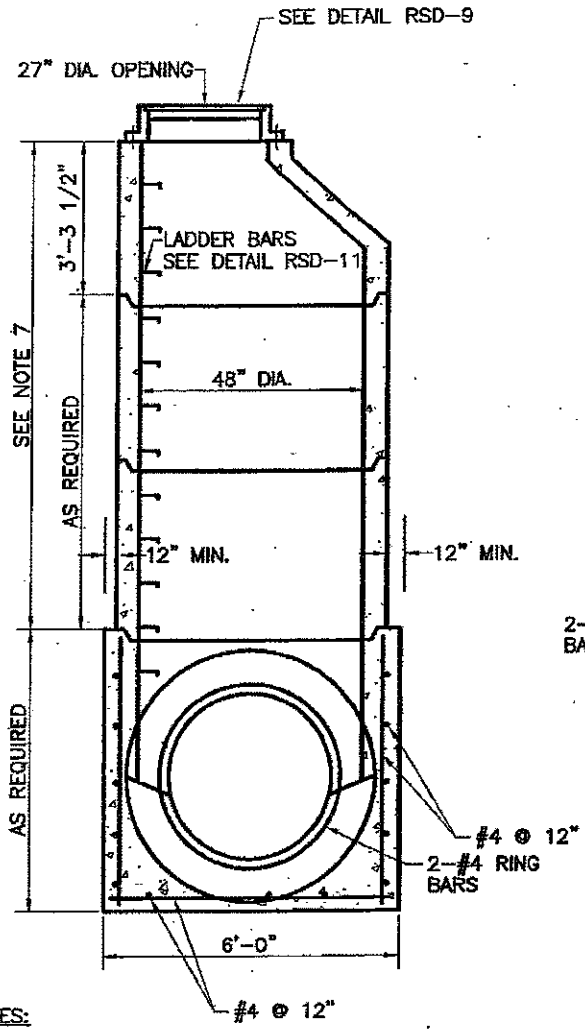

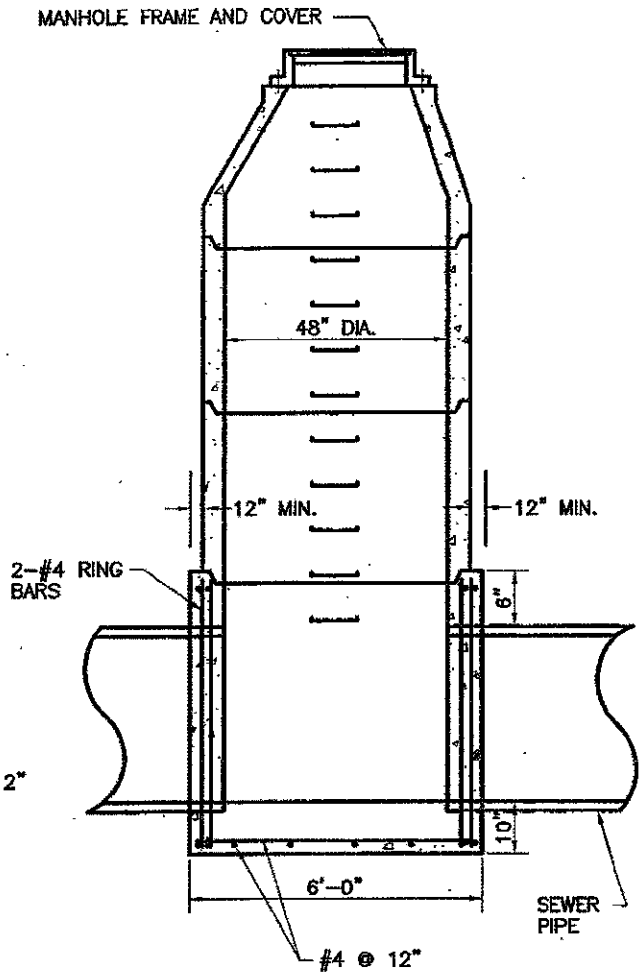

NOTES:

1. ALL CONCRETE SHALL BE PennDOT CLASS AA CONCRETE, 4000 PSI, 5% +/- 1% AIR ENTRAINED. ONLY PRECAST CONCRETE MANHOLES SUPPLIED BY A MANUFACTURER LISTED IN PennDOT BULLETIN 15 WILL BE PERMITTED.
2. MANHOLE BARREL JOINTS TO BE SEALED WITH FLEXIBLE BUTYL RUBBER JOINT SEALANT
3. FRAME AND COVER TO BE ANCHORED WITH 2-3/4" DIA. S.S. ANCHOR BOLTS SET 6-INCHES INTO CONCRETE
4. LIFTING HOLES TO BE POINTED WITH NON-SHRINK GROUT, AND LEFT WATERTIGHT, NEAT AND SMOOTH
5. MAXIMUM ADJUSTMENT TO FINISHED GRADE USING PRECAST GRADE RINGS SHALL NOT EXCEED NINE INCHES (9")
6. PRECAST SECTIONS SHALL CONFORM TO ASTM C-478, AS REVISED
7. IF THIS DIMENSION IS 3'-3", USE PRECAST SLAB TOP DESIGNED TO MEET LOAD CONDITIONS
8. SOURCE: PENNDOT STANDARDS FOR ROADWAY CONSTRUCTION. (LATEST EDITION)
9. PROVIDE PENN DOT MATERIAL CERTIFICATION ON ALL MATERIALS DELINEATED ON THE SITE

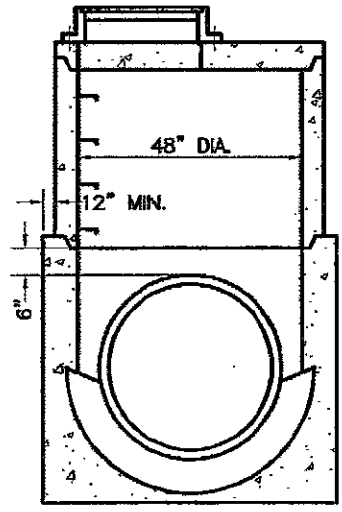

Scale:	N.T.S.		
Drwn By:	Chkd By:	Appd By:	
Filename:	Collierdet-1.dwg		
Date:	December 2008		

Township of Collier
Standard Details
Detail RSD-8
Precast Concrete Manhole (20" to 30")

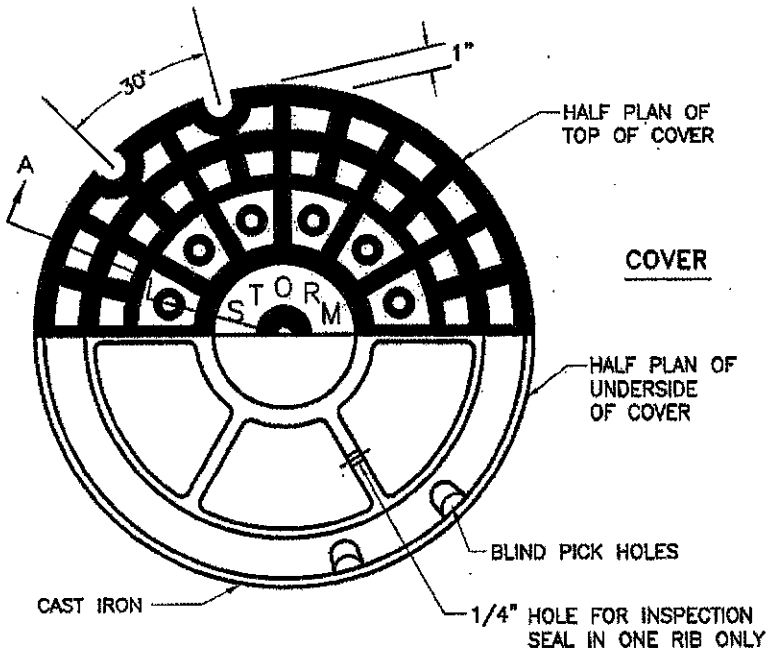

COVER

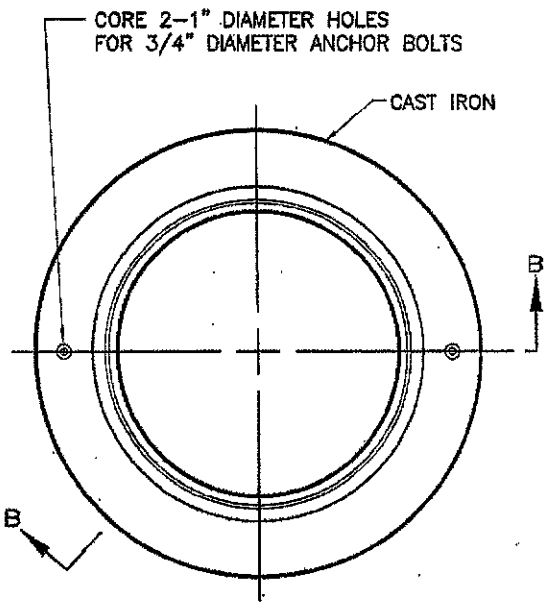

FRAME

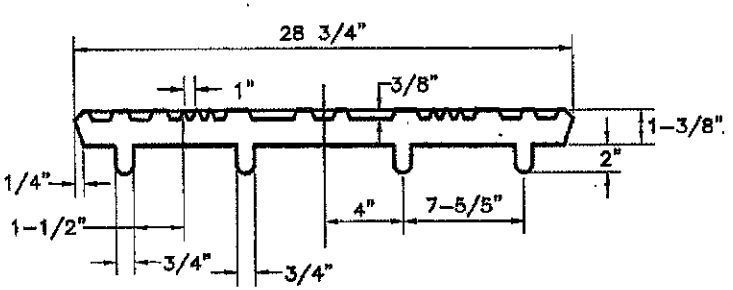

SECTION A-A

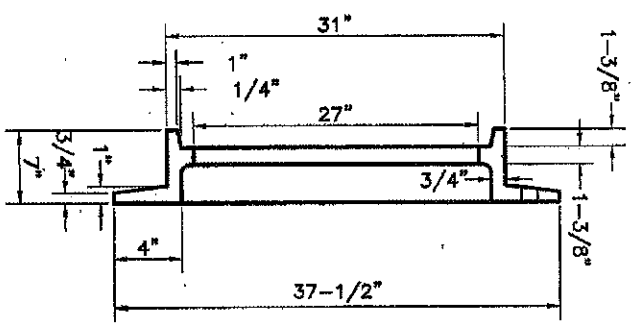

SECTION B-B

NOTE: LABEL MANHOLE COVER "STORM"

Township of Collier
Standard Details
Detail RSD-9
Circular Manhole Frame and Cover

Scale:	N.T.S.
Drwn By:	
Chkd By:	
Appd By:	
Filename:	Collierdet-1.dwg
Date:	December 2008

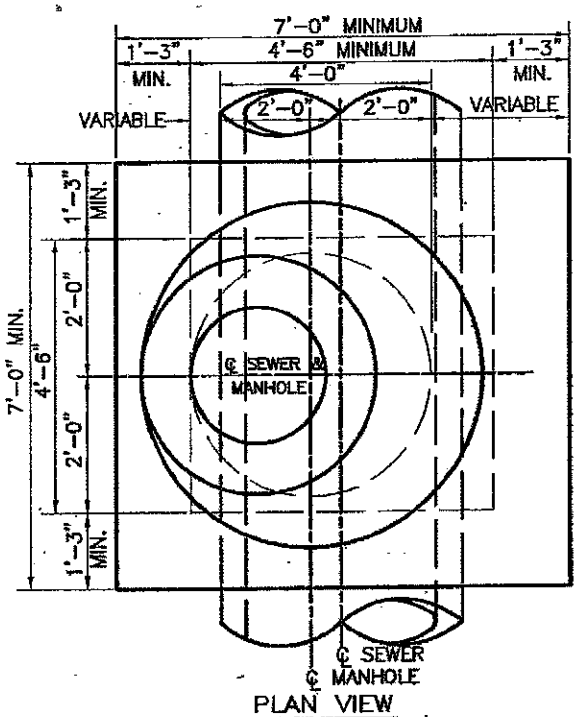

PLAN VIEW

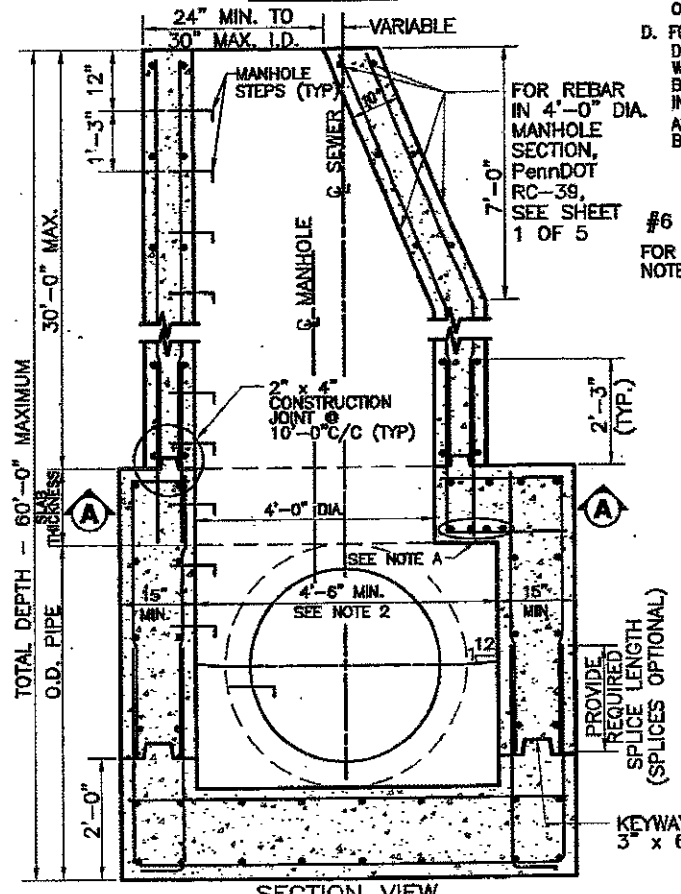

SECTION VIEW

MODIFIED MANHOLE

(FOR PIPES 36" DIA. OR LARGER)

NOTES:

1. FOR CONSTRUCTION REQUIREMENTS SEE NOTE 1, PennDOT RC-39,SHEET 1 OF 5.
2. FOR DESIGN REQUIREMENTS SEE NOTE 1, PennDOT RC-39, SHEET 5 OF 5.
3. INCREASE BOX SIZE WHEN REQUIRED TO KEEP WALLS OF MANHOLE BOX SECTION FLUSH WITH THE OPENING FOR PIPES LARGER THAN 42" I.D. INDICATE THE BOX SIZE ON THE CONSTRUCTION PLANS OR SHOP DRAWINGS BASED ON THE DESIGN PROCEDURES PROVIDED BELOW.
4. DESIGN PROCEDURE FOR MANHOLE BOX SECTION.

   DESIGN ALL MEMBERS FOR MOMENT, CRACK CONTROL & SHEAR AT DISTANCE d (EFFECTIVE DEPTH OF MEMBER) FROM FACE OF SUPPORT. ALL SPAN LENGTHS ARE CALCULATED FROM THE CENTER OF THE SUPPORTS.

   A. TOP SLAB

   DESIGN A 12" WIDE SLAB STRIP FOR ONE-WAY ACTION TO CARRY DEAD LOAD, LIVE LOAD, AND WEIGHT OF EARTH. SPAN THE STRIP, SIMPLY SUPPORTED, ACROSS THE WIDTH OF THE BOX OR IN THE SHORT DIRECTION. SEE FIGURE 1 FOR DETAILS.

   PLACE ADDITIONAL BARS IN THE SLAB AT 45 DEGREES AROUND THE MANHOLE OPENING. SEE SECTION A-A THIS SHEET FOR DETAILS.

   B. "EDGE BEAM"

   VIEWS SHOWING THE CONFIGURATION OF MANHOLE BOX SECTION ILLUSTRATE "EDGE BEAMS" TO BE THE SAME DEPTH AS THE TOP SLAB. TO ACHIEVE REQUIRED CAPACITY WHERE NECESSARY, INCREASE DEPTH OF "EDGE BEAM" BY PROVIDING ADDITIONAL CLEARANCE BETWEEN THE SLAB AND TOP OF OPENING. LOCATE HORIZONTAL STEEL FOR BEAM ABOVE THE SOFFIT OF THE OPENING. SEE FIGURE 2 FOR DETAILS.

   DESIGN THE "EDGE BEAMS", SPANNING THE LENGTH OF THE CARRY A UNIFORMLY BOX, TO DISTRIBUTED LOAD EQUAL TO THE REACTION FROM THE SLAB.

   C. WALLS

   DESIGN THE WALLS TO CARRY THE AXIAL LOAD, DUE TO EARTH LOAD, LIVE LOAD, AND DEAD LOAD APPLIED DIRECTLY TO THE WALL, IN ADDITION TO REACTIONS FROM THE "EDGE BEAMS", AND THE VERTICAL MOMENT CAUSED BY SATURATED AT REST EARTH PRESSURE. SEE FIGURE 2 FOR PRESSURE DIAGRAM. CONSIDER THE WALL SIMPLY SUPPORTED BETWEEN TOP SLAB AND FOOTING. PROVIDE THE SAME REINFORCEMENT ON THE OUTSIDE FACE.

   D. FOOTING

   DESIGN SPAN NORMAL TO PIPE TO CARRY POSITIVE MOMENT OF 1/10 Wl^2 AND NEGATIVE MOMENT OF 1/12 Wl^2 WHERE W IS THE UNIFORM BEARING PRESSURE. DO NOT TAKE INTO ACCOUNT THE CONCRETE IN THE CHANNEL WHEN CALCULATING CAPACITY OF THE FOOTING.

   AS A MINIMUM, PROVIDE NO. 4 BARS AT 12" CENTERS, TOP AND BOTTOM OF SLAB IN THE OPPOSITE DIRECTION.

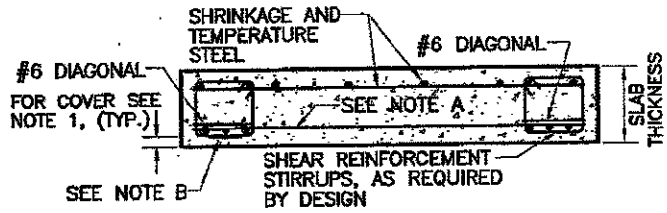

SECTION B-B

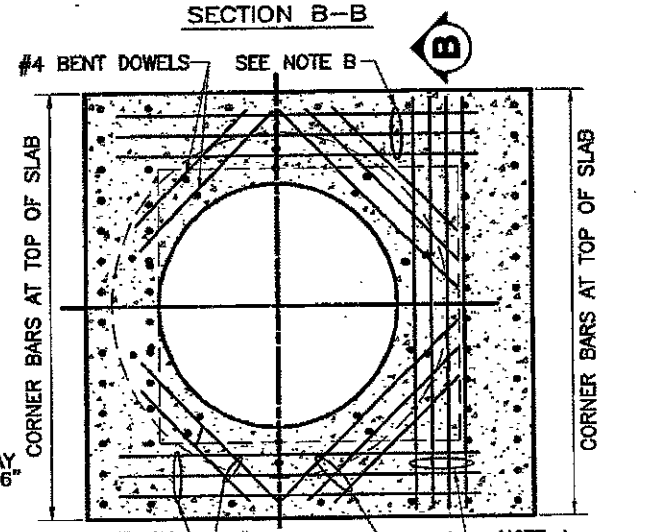

SECTION A-A

SOURCE: PENNDOT STANDARDS FOR ROADWAY CONSTRUCTION. (LATEST EDITION)

Scale: N.T.S.			Township of Collier Standard Details
Drwn By:	Chkd By:	Appd By:	Detail RSD-10
Filename: Collierdet-1.dwg			Concrete Manhole (36" and Up)
Date: December 2008			

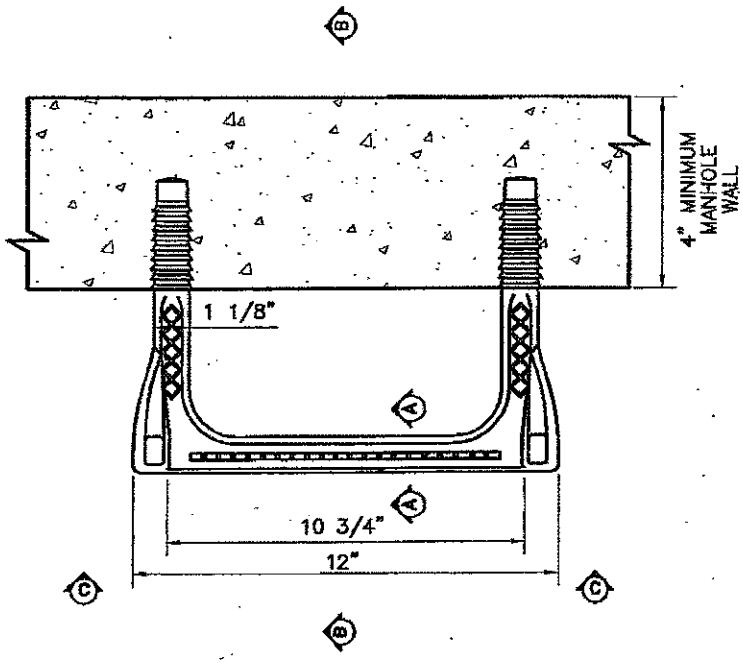

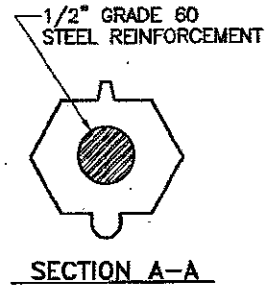

SECTION A–A

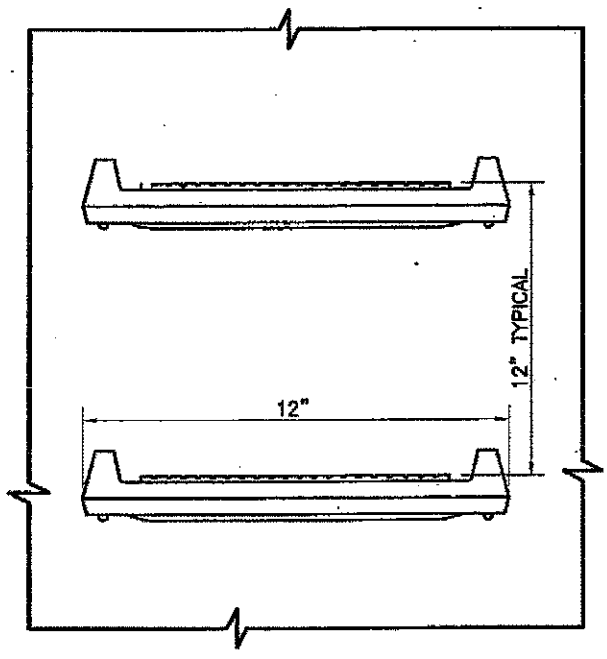

VIEW C–C

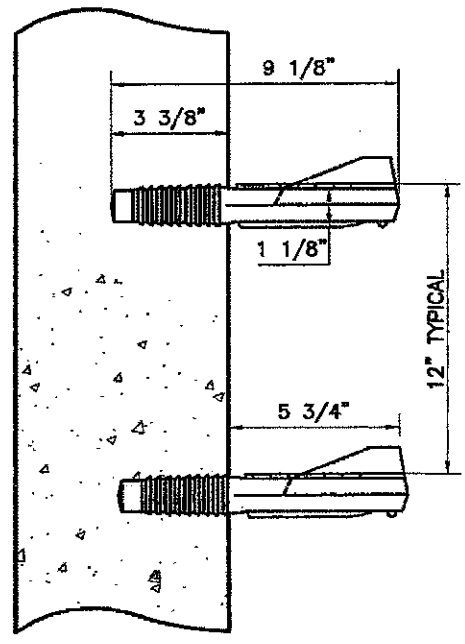

SECTION B–B

Scale:			N.T.S.
Drwn By:	Chkd By:	Appd By:	
Filename:	Collierdet–1.dwg		
Date:	December 2008		

Township of Collier
Standard Details
Detail RSD-11
Ladder Bars for Manholes and Inlets

DIAMETER PIPE	L_D
18" AND 21"	5'
24" AND 27"	7'
30" AND 36"	9'

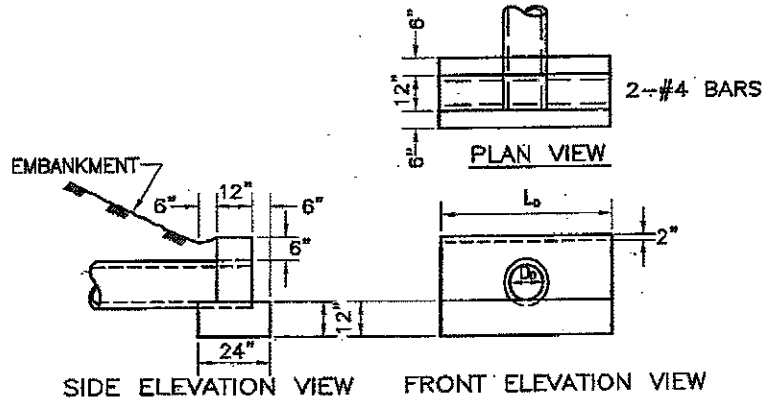

TYPE D ENDWALL

LOCAL CONDITIONS WILL GOVERN DIMENSION A_{D-E}

$L_{D-E} = 2.5_{D-E} + 12"$

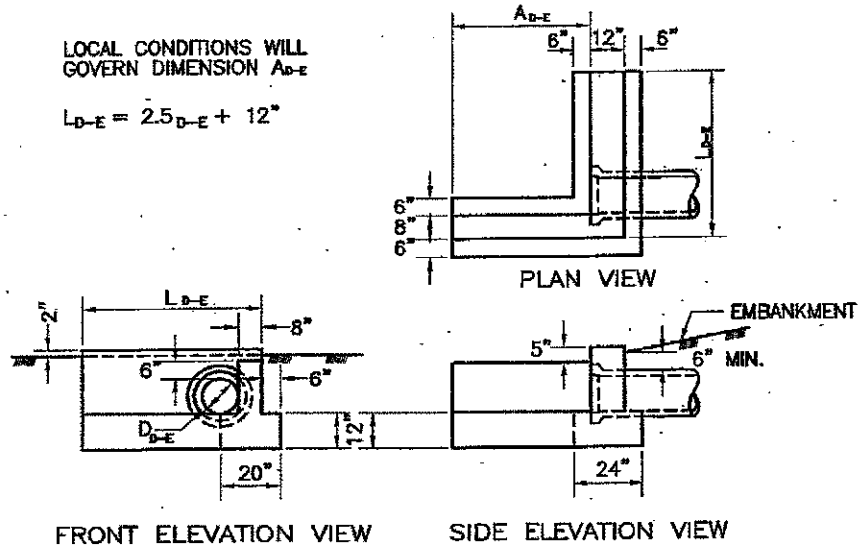

TYPE D-E ENDWALL

SIDE ROAD WALL TO BE PARALLEL TO SIDE ROAD

$L_{E-S} = 2.5D_{E-S} + 12"$

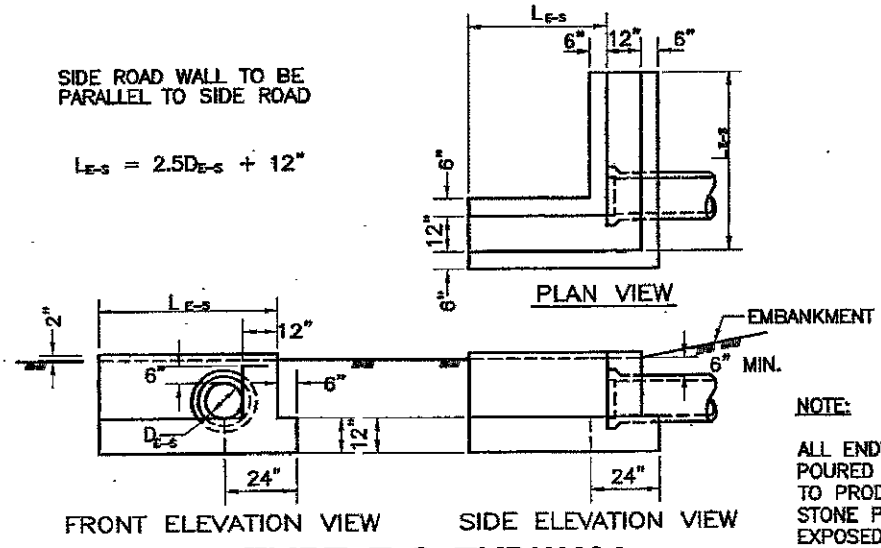

NOTE:

ALL ENDWALLS MUST BE POURED WITH FORM LINER TO PRODUCE RANDOM STONE PATTERN ON ALL EXPOSED FACES

TYPE E-S ENDWALL

SOURCE: PENNDOT STANDARDS FOR ROADWAY CONSTRUCTION. (LATEST EDITION)

Scale: N.T.S.		Township of Collier Standard Details
Drwn By:	Chkd By:	Appd By:
Filename: Collierdet-1.dwg		Detail RSD-12 (Page 1 of 2) Endwalls (15" to 33" Pipes)
Date: December 2008		

TABLE A

2 : 1 EMBANKMENT SLOPES

PIPE DIA.	SKEW∠=90° TO 60° θ = 30°			SKEW∠ = 55° θ = 35°			SKEW∠ = 50° θ = 40°			SKEW ∠ = 45° θ = 45°			SKEW ∠ = 40° θ = 50°			SKEW ∠ = 30° θ = 60°			SKEW ∠ = 20° θ = 70°			SKEW ∠ = 10° θ = 80°				
D_{D-W} (IN.)	L_{D-W} (FT.)	ℓ (FT.)	W_1 (FT.)	L_{D-W} (FT.)	ℓ (FT.)	W_1 (FT.)	L_{D-W} (FT.)	ℓ (FT.)	W_1 (FT.)	L_{D-W} (FT.)	ℓ (FT.)	W_1 (FT.)	L_{D-W} (FT.)	ℓ (FT.)	W_1 (FT.)	L_{D-W} (FT.)	ℓ (FT.)	W_1 (FT.)	L_{D-W} (FT.)	ℓ (FT.)	W_1 (FT.)	L_{D-W} (FT.)	ℓ (FT.)	W_1 (FT.)	W_2 (FT.)	A_{D-W} (IN.)
36	5.8	0	4.6	6.0	.33	4.9	6.2	.5	5.2	6.5	.67	5.7	7.0	.75	6.2	8.3	1.33	8.0	11.1	1.75	11.7	19.6	5.0	23.0	4.6	12
42	6.3	0	5.8	6.6	.33	6.1	6.9	.5	6.5	7.3	.67	7.1	7.8	.75	7.8	9.3	1.33	10.0	12.5	1.75	14.6	22.5	5.0	28.8	5.8	12
48	6.9	0	6.9	7.2	.33	7.3	7.5	.5	7.8	8.0	.67	8.5	8.5	.75	9.4	10.3	1.33	12.0	14.0	1.75	17.5	25.3	5.0	34.6	6.9	12
54	7.5	0	8.0	7.8	.33	8.5	8.2	.5	9.1	8.7	.67	9.9	9.3	.75	10.9	11.3	1.33	14.0	15.5	1.75	20.5	28.2	5.0	40.3	8.0	12
60	8.1	0	9.2	8.4	.33	9.8	8.8	.5	10.4	9.4	.67	11.3	10.1	.75	12.5	12.3	1.33	16.0	16.9	1.75	23.4	31.1	5.0	46.0	9.2	15
72	9.2	0	11.5	9.6	.33	12.2	10.1	.5	13.0	10.8	.67	14.1	11.7	.75	15.6	14.3	1.33	20.0	19.8	1.75	29.2	36.9	5.0	57.6	11.5	15

$$SD = \frac{D_{D-W}}{\cos\theta} = \frac{D_{D-W}}{\sin SKEW\angle}$$

$$L_{D-W} = SD + 2.3'$$

$$W_1 = \frac{2_{D-W} - 2'}{\cos\theta} \text{ (FOR 2 :1 SLOPE)}$$

$$W_1 = \frac{X}{\cos\theta}\left(D_{D-W} - 0.5\frac{1.0}{X}\right)$$

(FOR VARIABLE SLOPE WHEN X EQUALS HORIZONTAL DIMENSION OF THE SLOPE DESIGNATION.)

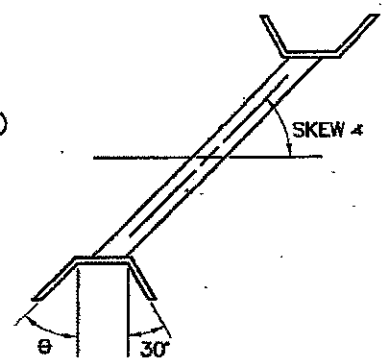

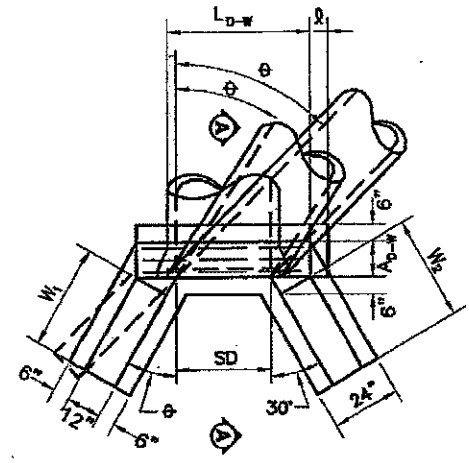

PLAN VIEW

NOTES:

1. PROVIDE MATERIALS AND WORKMANSHIP IN ACCORDANCE WITH THE APPROPRIATE SPECIFICATIONS AS OUTLINED IN PUBLICATION 408, SECTION 605. PENNDOT MATERIAL CERTIFICATION ON ALL MATERIALS
2. USE PennDOT CLASS AA CONCRETE.
3. CHAMFER EXPOSED EDGES ONE INCH.
4. PROVIDE REINFORCEMENT (.12IN. /L.F.) IN ACCORDANCE WITH PUBLICATION 408, SECTION 709.
5. ALL ENDWALLS MUST BE POURED WITH FORM LINER TO PRODUCE RANDOM STONE PATTERN ON ALL EXPOSED FACES.

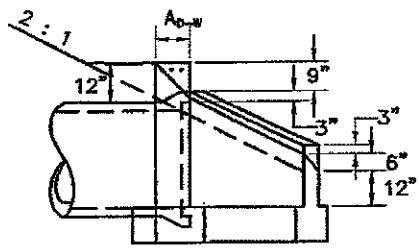

SECTION A–A

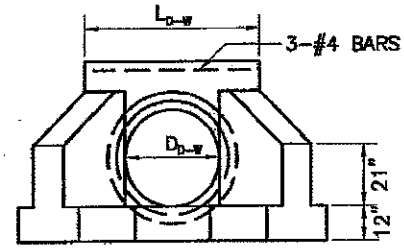

FRONT ELEVATION VIEW

TYPE D-W ENDWALL

(SEE TABLE A, FOR DIMENSIONS NOT INDICATED.)

SOURCE: PENNDOT STANDARDS FOR ROADWAY CONSTRUCTION. (LATEST EDITION)

Scale: N.T.S.		Township of Collier Standard Details
Drwn By:	Chkd By:	Appd By:
Filename: Collierdet–1.dwg		Detail RSD-12 (Page 2 of 2) Endwalls (36" to 72" Pipes)
Date: December 2008		

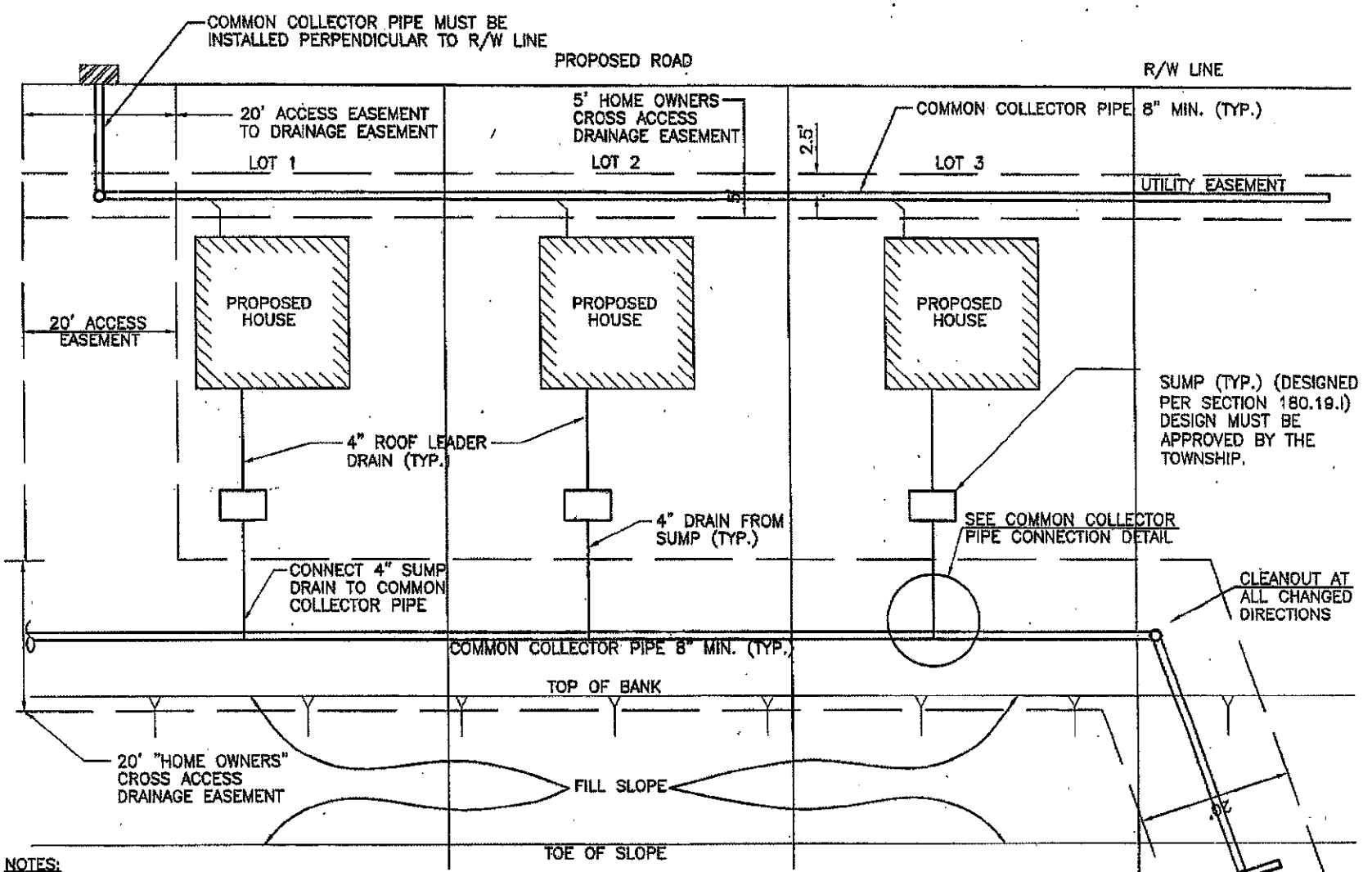

NOTES:

1. THE COMMON COLLECTOR PIPE MUST BE SIZED FOR THE CONTRIBUTING AREA. THE PIPE MUST BE A MINIMUM OF 8 INCHES IN DIAMETER AND SIZED BY A PROFESSIONAL ENGINEER. THE PIPE SIZE DESIGN MUST BE APPROVED BY THE TOWNSHIP.
2. MAINTENANCE OF THE COMMON COLLECTOR PIPE WILL BE THE SHARED RESPONSIBILITY OF THE OWNERS OF THE HOMES SERVED BY THE PIPE OR BY A HOME OWNER'S ASSOCIATION. A NOTE SHALL BE ADDED TO THE SUBDIVISION PLAN INDICATING RESPONSIBILITY.
3. SUMPS ONLY REQUIRED IF COLLECTOR PIPE DISCHARGED UNCONTROLLED AND HAS NOT BEEN INCLUDED IN STORM WATER REPORT. DEVELOPERS GEOTECHINICAL ENGINEER MUST PROVIDE RECOMMENDATION ON SUMP LOCATIONS AND INFILTRATION TESTING AT THE TIME OF PLAN APPLICATION FOR APPROVAL.
4. COLLECTOR PIPE FOR STORMWATER MUST BE "BLACK". GREEN OR WHITE PIPE IS NOT PERMITTED

Scale: N.T.S.
Drwn By: Chkd By: Appd By:
Filename: Collierdet-1.dwg
Date: December 2008

Township of Collier
Standard Details
Detail RSD-13 (Page 1 of 2)
Roof Drain Sump Outlet

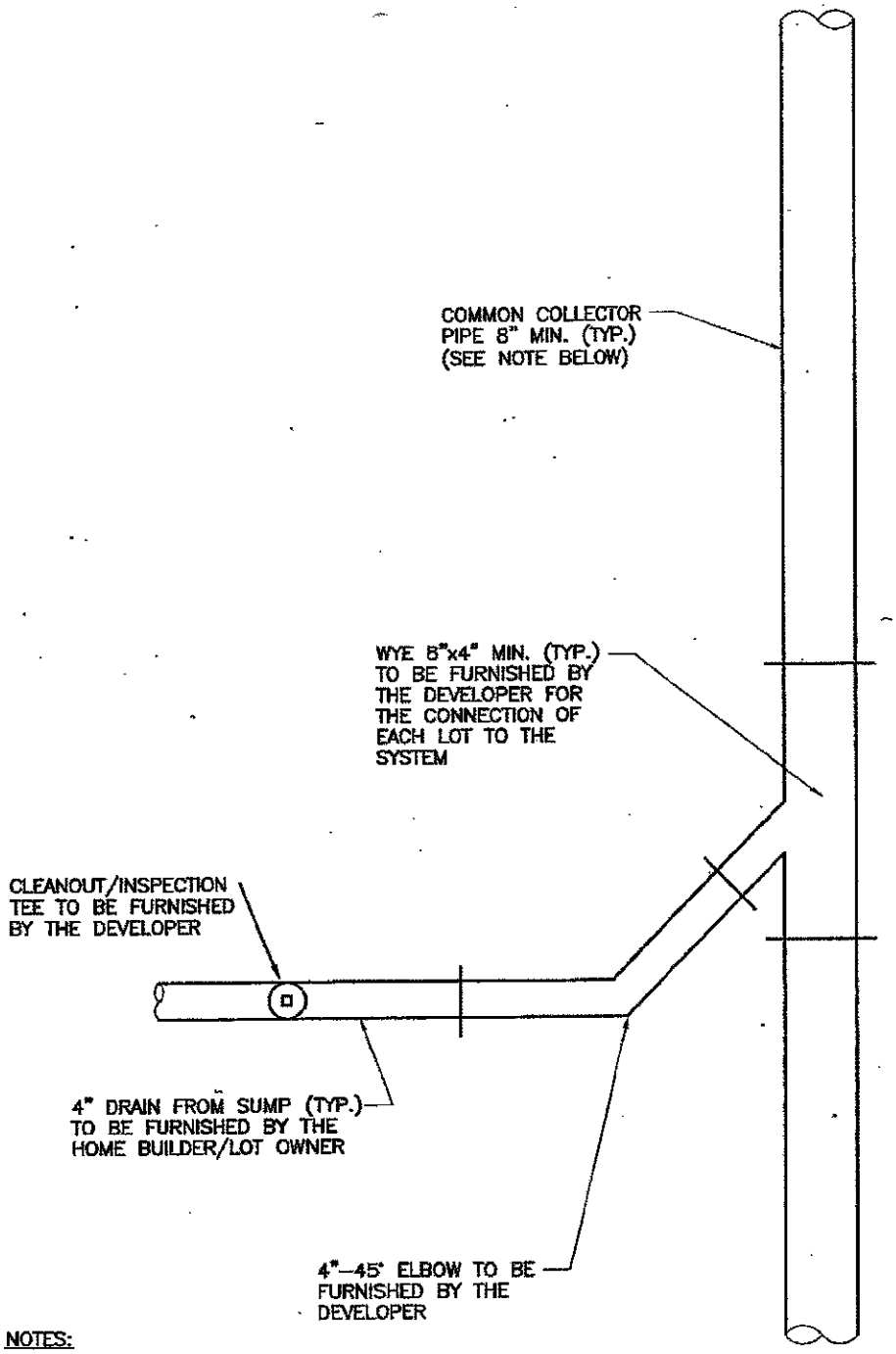

NOTES:

1. THE COMMON COLLECTOR PIPE MUST BE SIZED FOR THE CONTRIBUTING DRAINAGE AREA. THE PIPE MUST BE A MINIMUM OF 8 INCHES SDR-35 "BLACK" IN DIAMETER AND SIZED BY A PROFESSIONAL ENGINEER. THE PIPE SIZE DESIGN MUST BE APPROVED BY THE TOWNSHIP. PIPE COLOR MUST BE BLACK WITH WARNING TAPE INDICATING STORM PIPE. ALL PIPES UNDER 8" MUST BE SDR-26 WITH COLOR "BLACK" FOR STORM SEWERS

2. MAINTENANCE OF THE COMMON COLLECTOR PIPE WILL BE THE SHARED RESPONSIBILITY OF THE OWNERS OF THE HOMES SERVED BY THE PIPE OR BY A HOME OWNER'S ASSOCIATION. A NOTE SHALL BE ADDED TO THE SUBDIVISION PLAN INDICATING RESPONSIBILITY.

Scale: N.T.S.		Township of Collier Standard Details
Drwn By:	Chkd By: / Appd By:	Detail RSD-13 (Page 2 of 2) Common Collector Pipe Connection
Filename: Collierdet-1.dwg		
Date: December 2008		

AS PROVIDED BY ALMETEK
OR APPROVED EQUAL

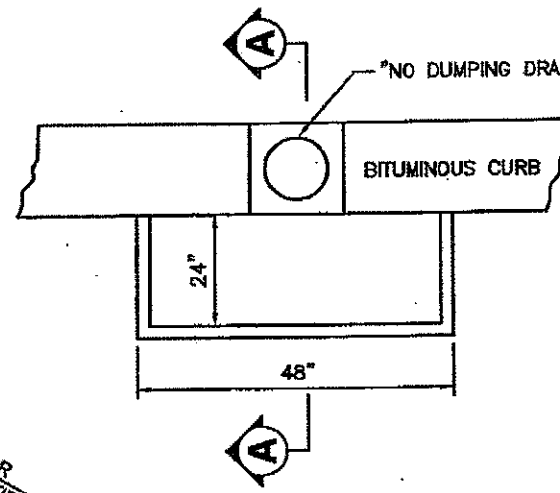

PLAN VIEW

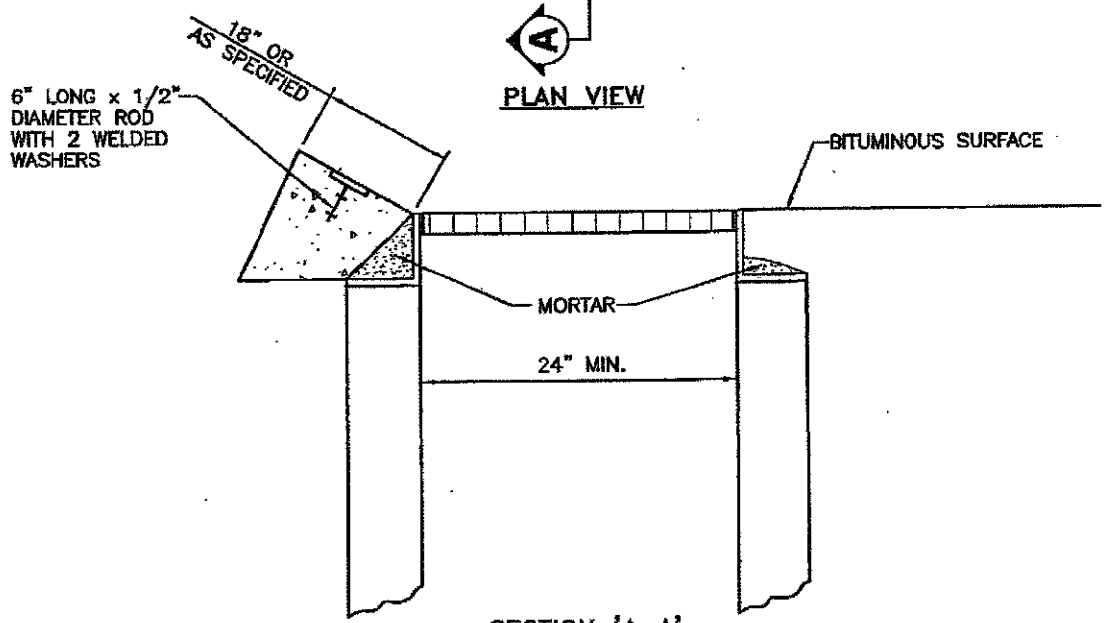

SECTION 'A–A'

Scale: N.T.S.		Township of Collier Standard Details
Drwn By:	Chkd By: / Appd By:	Detail RSD-14
Filename: Collierdet–1.dwg		"NO DUMPING- DRAINS TO RIVER" Disk
Date: December 2008		

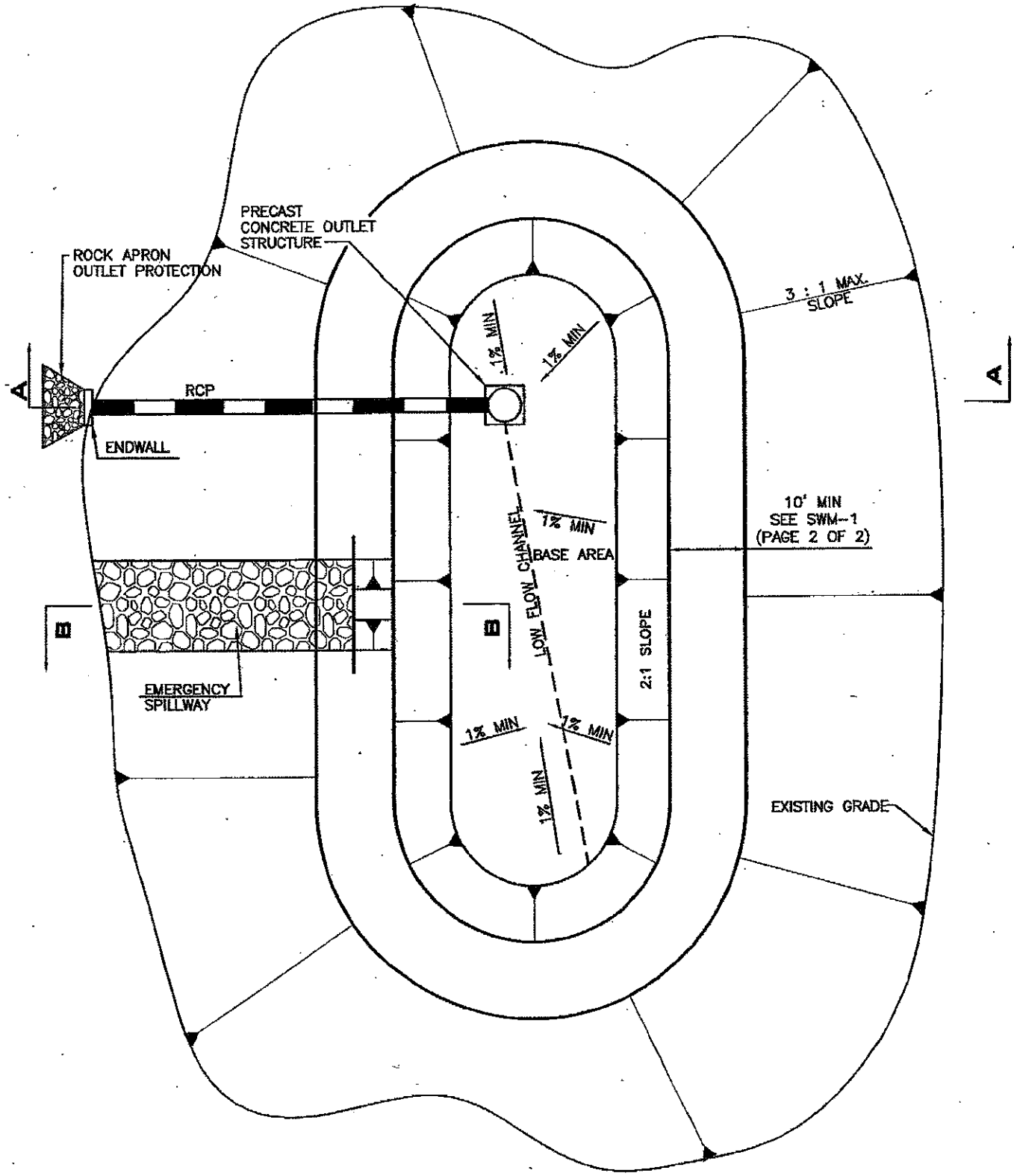

Scale: N.T.S.		Township of Collier Standard Details
Drwn By:	Chkd By:	Appd By:
Filename: Collierdet-1.dwg		Detail SWM-1 (Page 1 of 3) Permanent Earth Dam - Plan View
Date: December 2008		

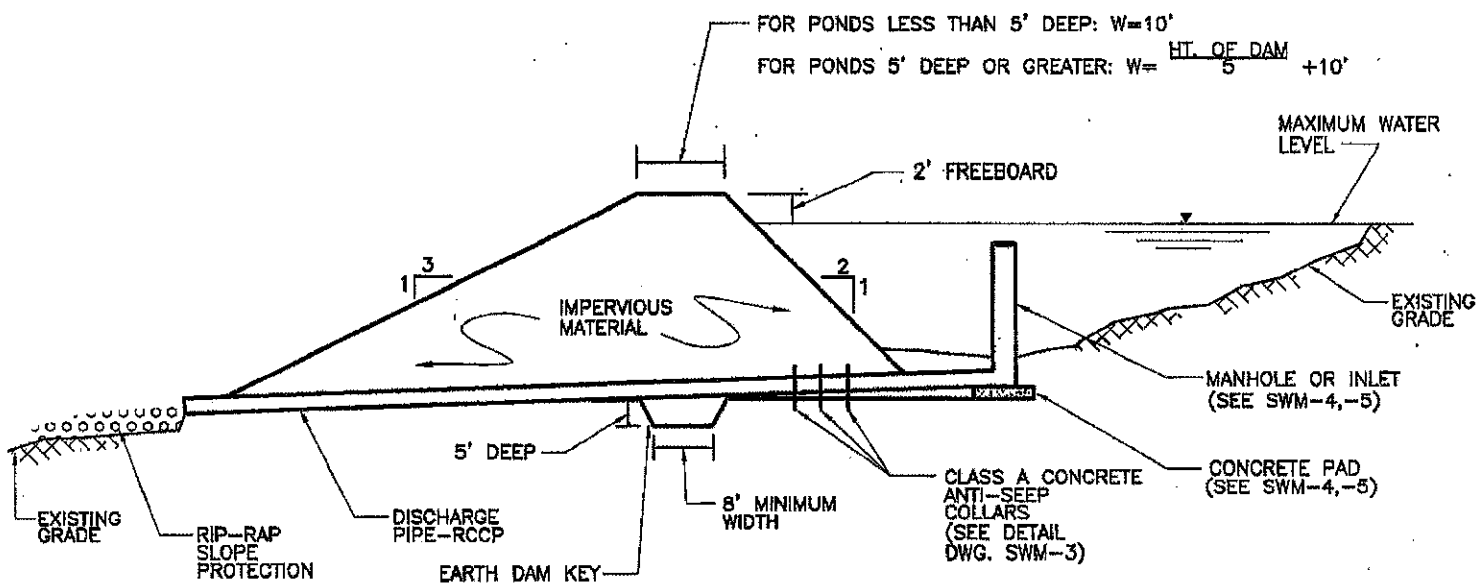

NOTES:

1. ROCK APRON OUTLET PROTECTION TO BE SIZED ACCORDING TO EXIT VELOCITY AND SHEAR CALCULATIONS TO BE SUBMITTED TO THE TOWNSHIP (SEE DETAILS SWM-8 & SWM-8A).

2. ALL CALCULATIONS FOR BASIN SIZING, FREEBOARD, OUTLET STRUCTURES, DISCHARGE PIPES, ETC. MUST BE SUBMITTED TO THE TOWNSHIP.

3. TEMPORARY RISER PIPES MAY BE CMP RISERS.

Scale: N.T.S.
Drwn By: Chkd By: Appd By:
Filename: Collierdet-1.dwg
Date: December 2008

Township of Collier
Standard Details
Detail SWM-1 (Page 2 of 3)
Permanent Earth Dam - Section A-A

NOTE:
SPILLWAY TO BE CUT INTO EXISTING GROUND SPILLWAYS CONSTRUCTED IN EMBANKMENT SHALL BE FULLY PAVED OR GROUTED RIP-RAP

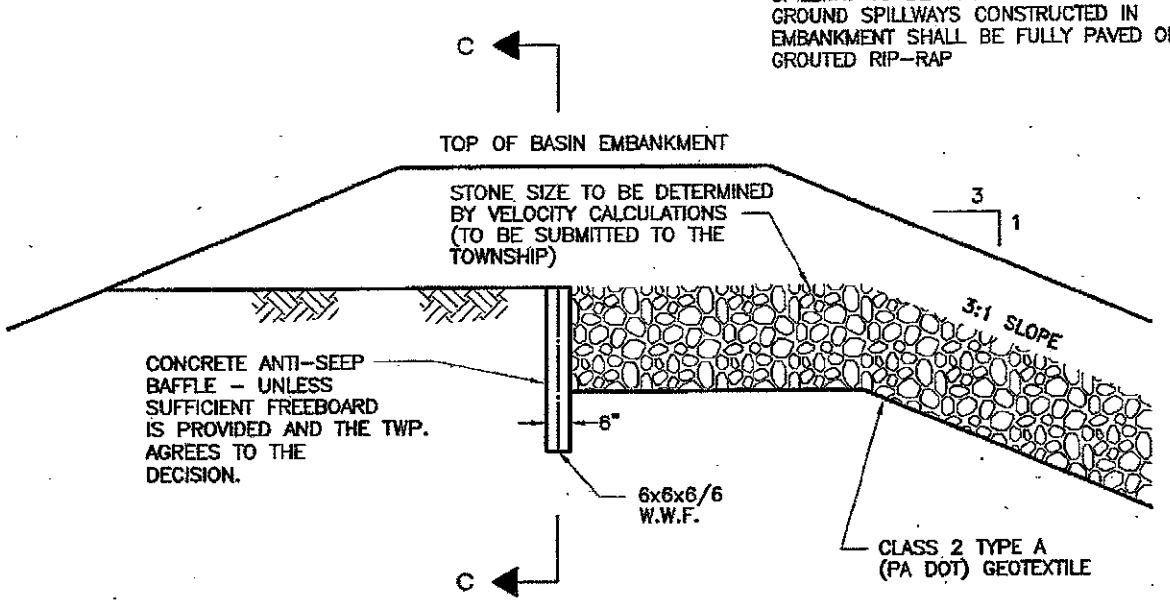

SECTION B-B

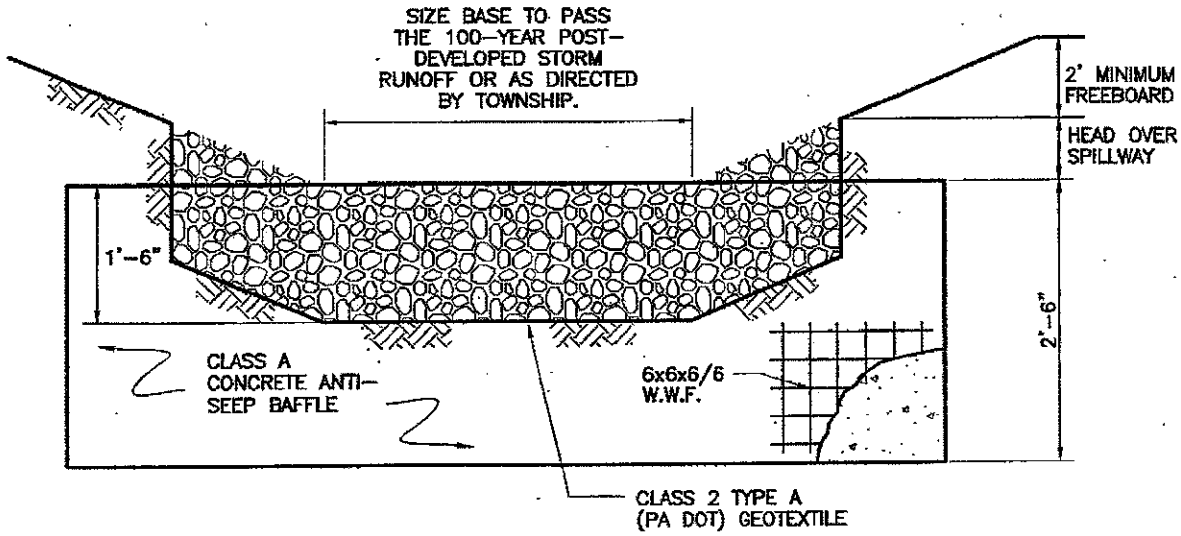

SECTION C-C

Scale: N.T.S.			Township of Collier Standard Details
Drwn By:	Chkd By:	Appd By:	Detail SWM-1 (Page 3 of 3)
Filename: Collierdet-1.dwg			Permanent Earth Dam - Sections B-B & C-C
Date: December 2008			

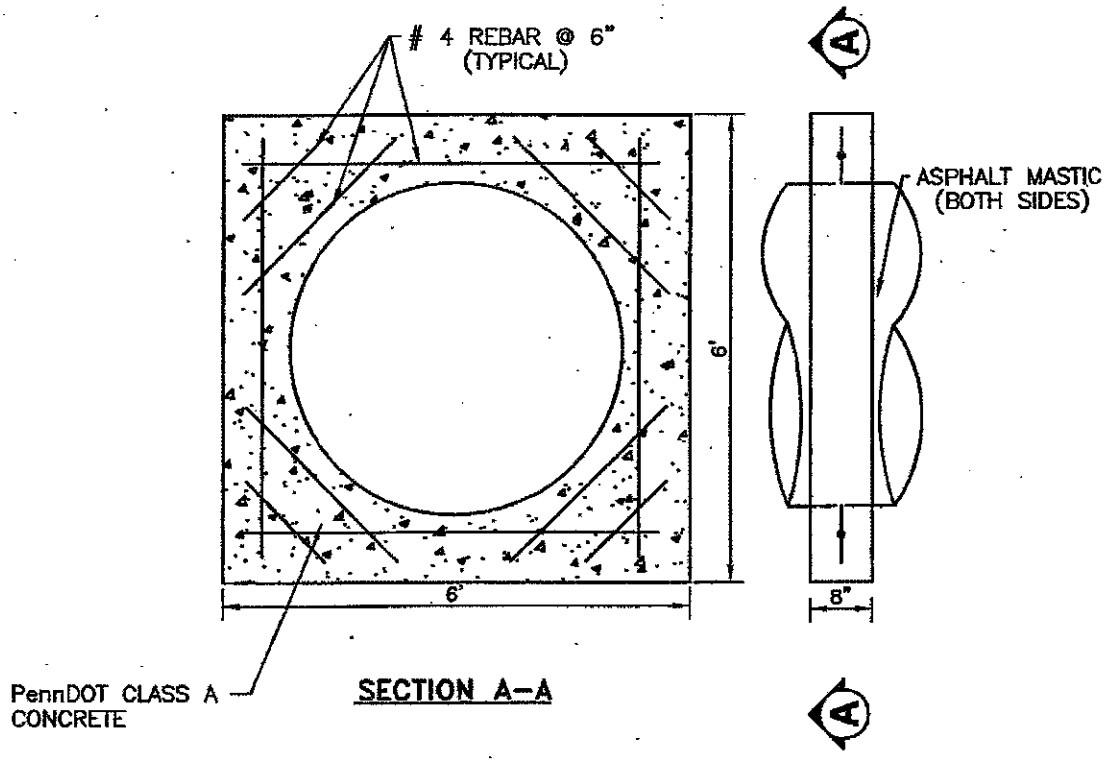

Scale: N.T.S.		Township of Collier Standard Details
Drwn By:	Chkd By:	Appd By:
Filename: Collierdet-1.dwg		Detail SWM-2 Concrete Anti-Seep Collars
Date: December 2008		

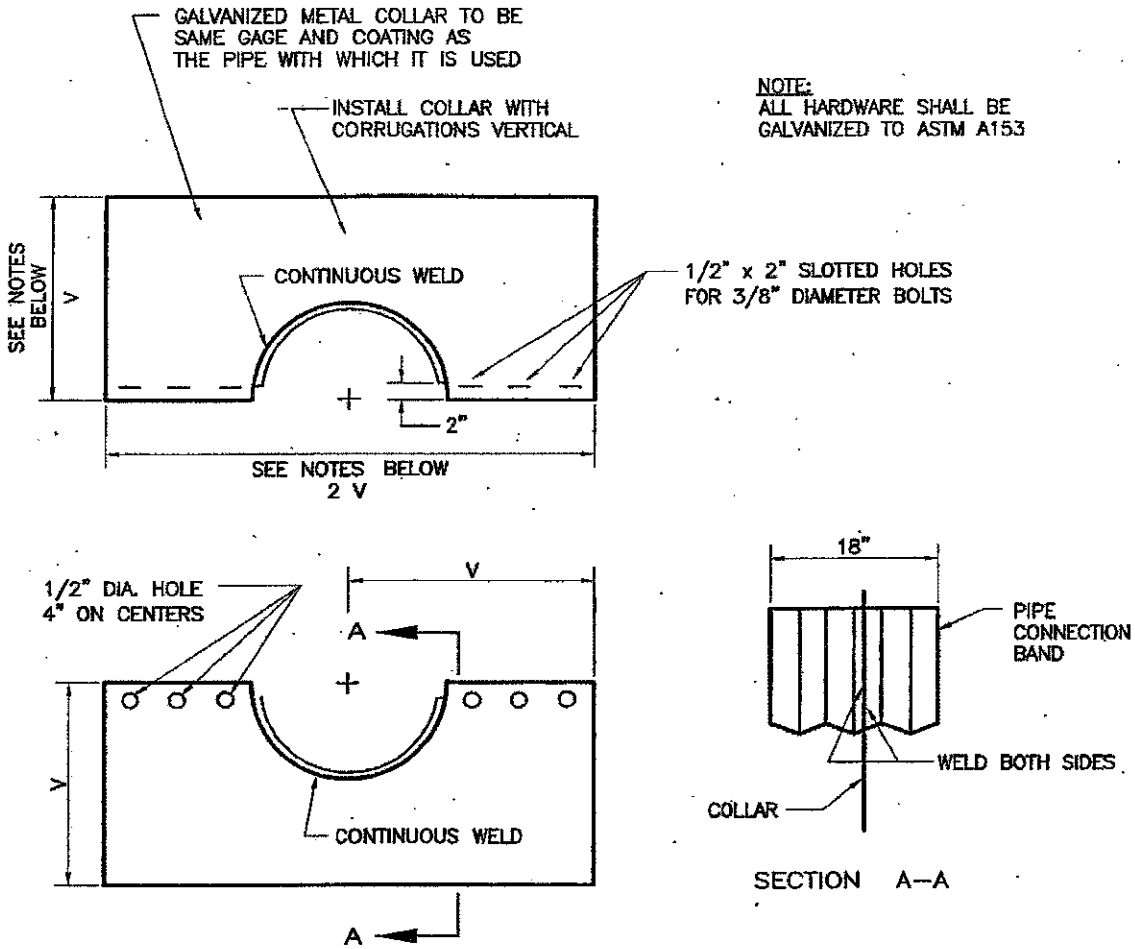

NOTES:

V = VERTICAL PROJECTION AND MINIMUM HORIZONTAL PROJECTION OF THE ANTI–SEEP COLLAR IN FEET

L = LENGTH IN FEET OF THE CONDUIT WITHIN THE ZONE OF SATURATION, MEASURED FROM THE DOWNSTREAM SIDE OF THE RISER TO THE TOE DRAIN OR POINT WHERE PHREATIC LINE INTERCEPTS THE CONDUIT, WHICHEVER IS SHORTER

N = NUMBER OF ANTI–SEEP COLLARS

THE RATIO OF THE LENGTH OF THE LINE OF SEEPAGE (L + 2 N V) TO L IS TO BE NOT LESS THAN 1.15. ANTI–SEEP COLLARS SHALL BE EQUALLY SPACED ALONG THAT PART OF THE BARREL WITHIN THE SATURATED ZONE AT DISTANCES OF NOT MORE THAN 25 FEET.

* TAKEN FROM U.S. DEPT. OF AGRICULTURE SCS TR–60

Scale: N.T.S.			Township of Collier Standard Details
Drwn By:	Chkd By:	Appd By:	Detail SWM-2A
Filename: Collierdet–1.dwg			Corrugated Metal Anti-Seep Collar
Date: December 2008			

NOTES:

1. ALL CONCRETE SHALL BE PennDOT CLASS AA CONCRETE, 4000 PSI, 5% AIR ENTRAINED

2. INLET JOINTS TO BE SEALED WITH 1" DIA. FLEXIBLE BUTYL RUBBER JOINT SEALANT, USE 1/2" DIA. FOR FRAME AND GRATE

3. FRAME AND GRATE TO BE ANCHORED WITH 2-3/4" DIA. S.S. ANCHOR BOLTS SET 6-INCHES INTO CONCRETE

4. LIFTING HOLES TO BE POINTED WITH NON-SHRINK GROUT, AND LEFT WATERTIGHT, NEAT AND SMOOTH

5. MAXIMUM ADJUSTMENT TO FINISHED GRADE USING PRECAST GRADE SPACERS SHALL NOT EXCEED NINE INCHES (9")

6. PRECAST SECTIONS SHALL CONFORM TO ASTM C-478 AS REVISED

7. INLET INVERT SHALL BE CONCRETE TO THE SPRING LINE OF PIPE WITH SIDES SLOPING 1/2" TO 1'- 0" TO INSIDE FACE OF PRECAST BASE SECTION

8. IF THE OUTLET PIPE IS 18" OR LESS, USE 4'- 0"; IF GREATER THAN 18", USE 5'- 0"

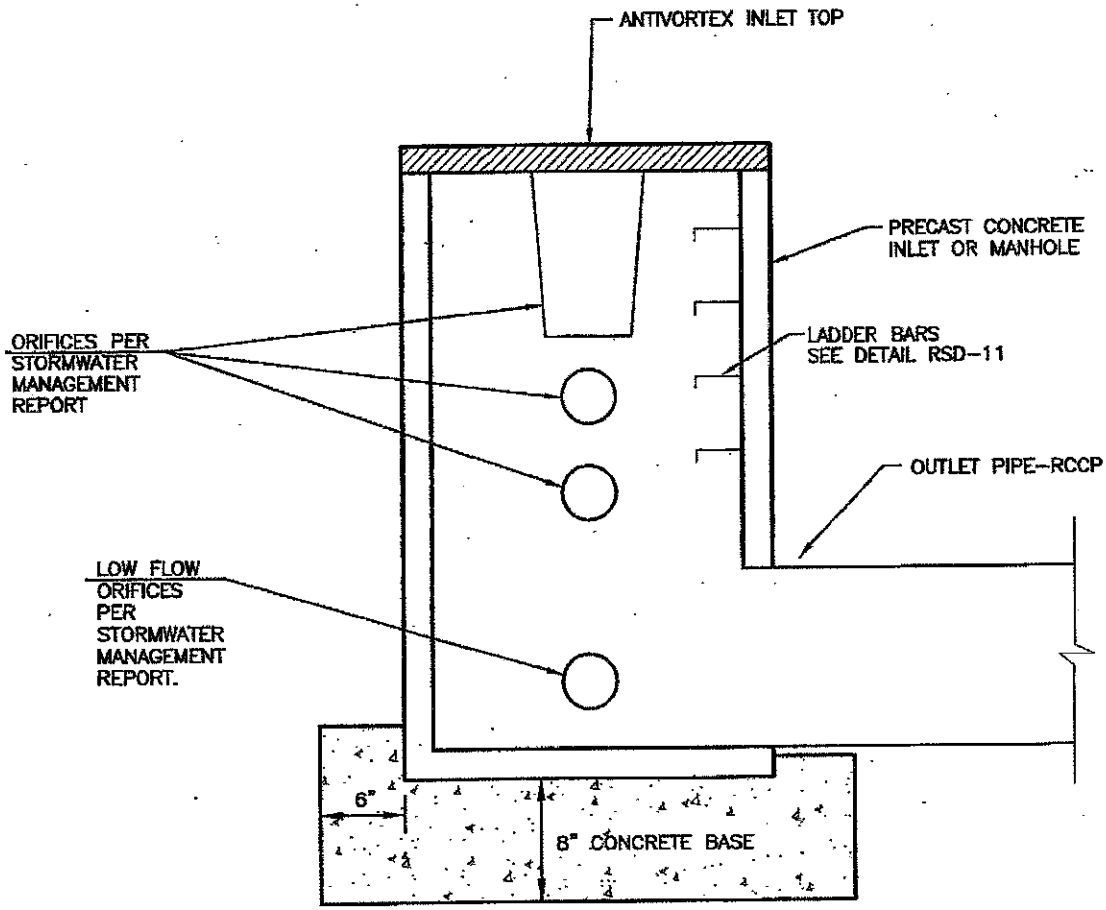

DETENTION BASIN AC RISER

N. T. S.

Scale: N.T.S.		Township of Collier Standard Details
Drwn By:	Chkd By:	Appd By:
Filename: Collierdet-1.dwg		Detail SWM-3 Concrete Inlet Riser for Detention Basins
Date: December 2008		

NOTE:

(1) ORIFICE No., SIZE, AND LOCATION ON RISER TO BE DETERMINED BY CALCULATIONS AND SUBMITTED TO TWP.

(2) MAXIMUM HEIGHT OF RISER 8'-0"

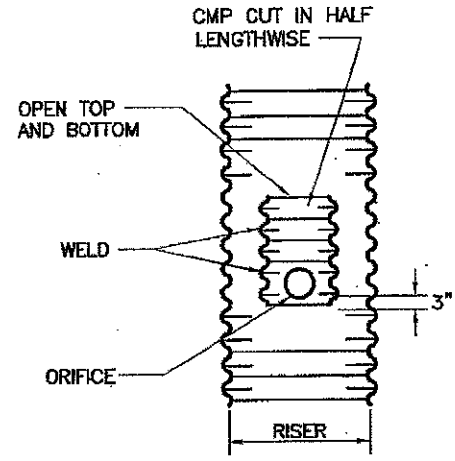

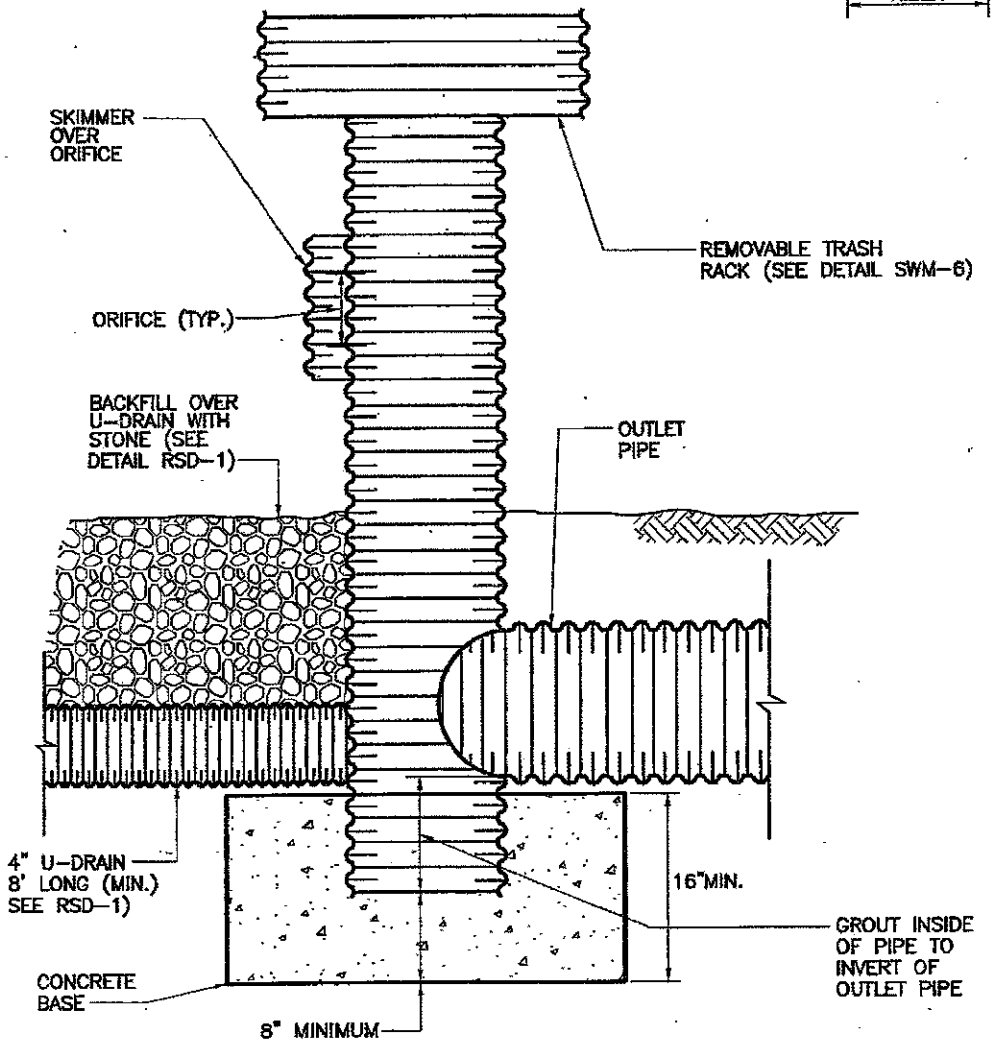

Scale: N.T.S.		Township of Collier Standard Details
Drwn By:	Chkd By:	Appd By:
Filename: Collierdet-1.dwg		Detail SWM-4
Date: December 2008		Corrugated Metal Riser Pipe for Temporary Sediment Basins

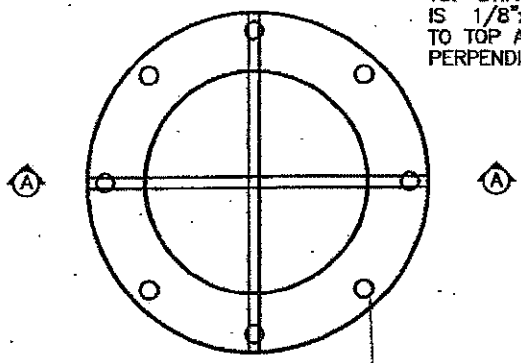

PLAN

TOP STIFFENER (IF REQUIRED) IS 1/8"x 2"x2" ANGLE WELDED TO TOP AND ORIENTED PERPENDICULAR TO CORRUGATIONS.

PRESSURE RELIEF HOLES – 1 1/2"ø

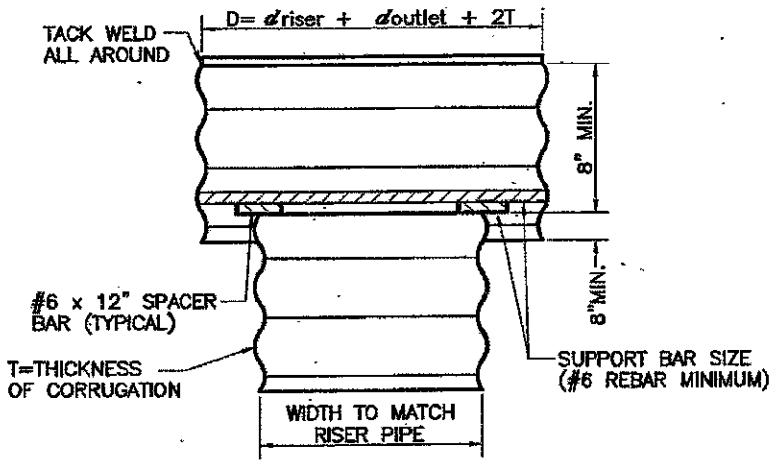

SECTION A – A

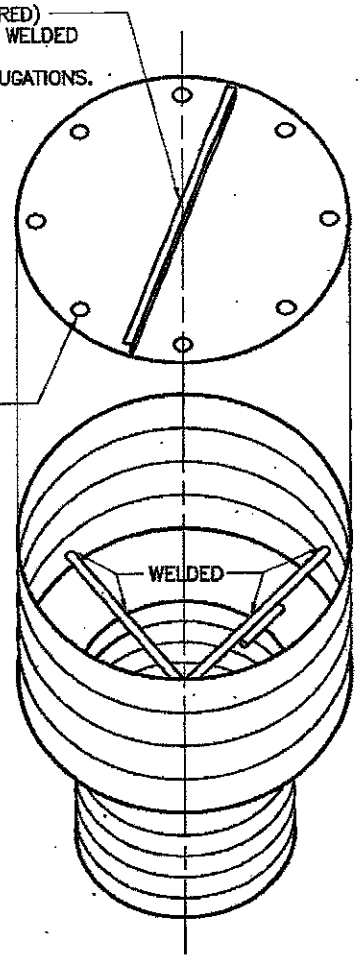

ISOMETRIC

NOTE:

1. TOP IS 14 GAGE CORRUGATED METAL OR 1/8" STEEL PLATE, PRESSURE RELIEF HOLES MAY BE OMITTED, IF ENDS OF CORRUGATIONS ARE LEFT FULLY OPEN WHEN CORRUGATED TOP IS WELDED TO CYLINDER.
2. CYLINDER IS 16 GAGE CORRUGATED METAL PIPE OR FABRICATED FROM 1/8" STEEL PLATE.
3. THE CYLINDER MUST BE FIRMLY FASTENED TO THE TOP OF THE RISER.
4. SUPPORT BARS ARE WELDED TO THE TOP OF THE RISER OR ATTACHED BY STRAPS BOLTED TO TOP OF RISER.

Scale: N.T.S.		Township of Collier Standard Details
Drwn By:	Chkd By:	Appd By:	Detail SWM-5
Filename: Collierdet–1.dwg		Trash Rack and Anti-Vortex Device for Temporary Sediment Basins
Date: December 2008		

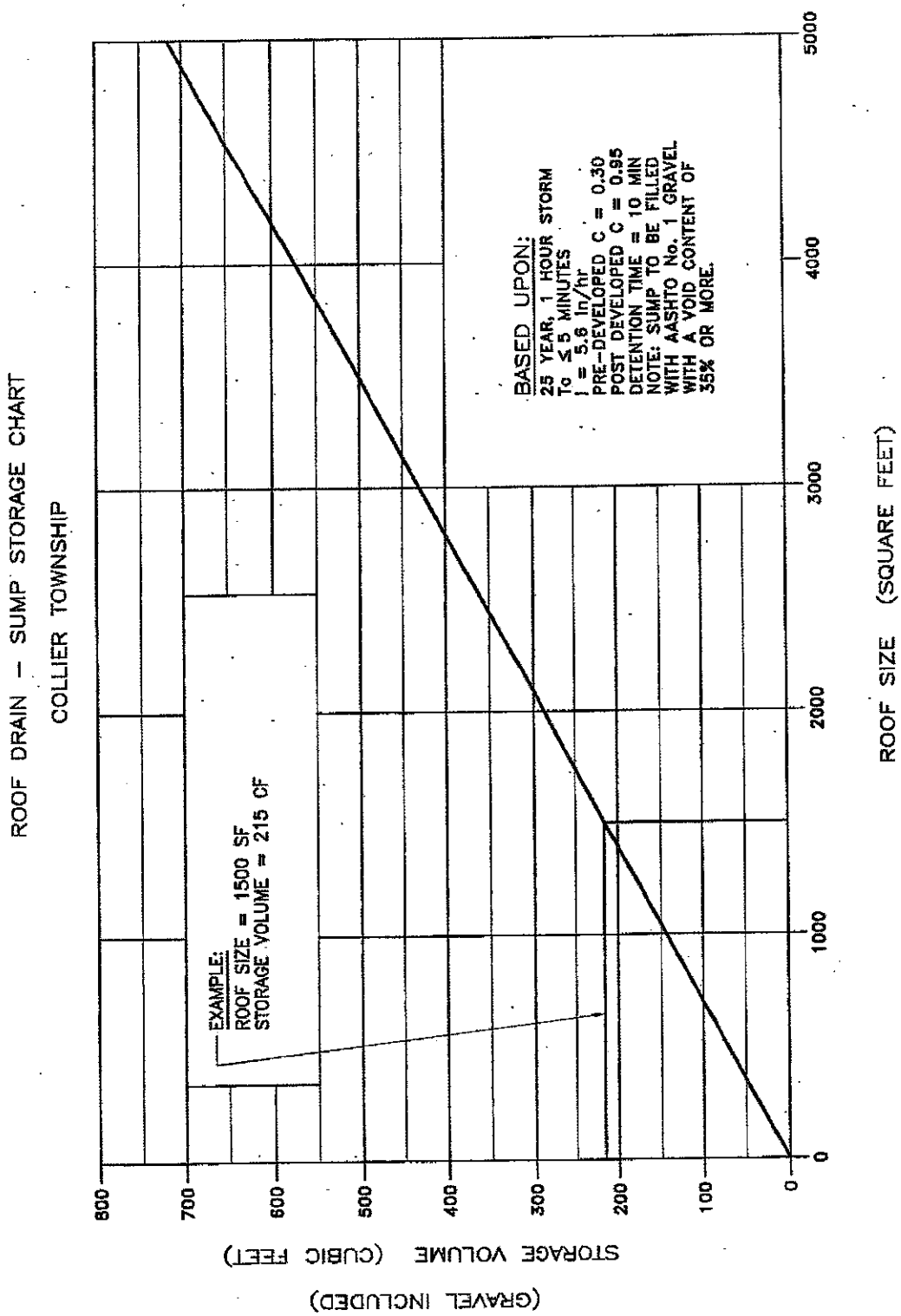

Scale: N.T.S.		Township of Collier Standard Details
Drwn By:	Chkd By:	Appd By:	Detail SWM-6
Filename: Collierdet-1.dwg		Roof Drain/Sump Storage Chart (25-Year Storm Event Design)
Date: December 2008		

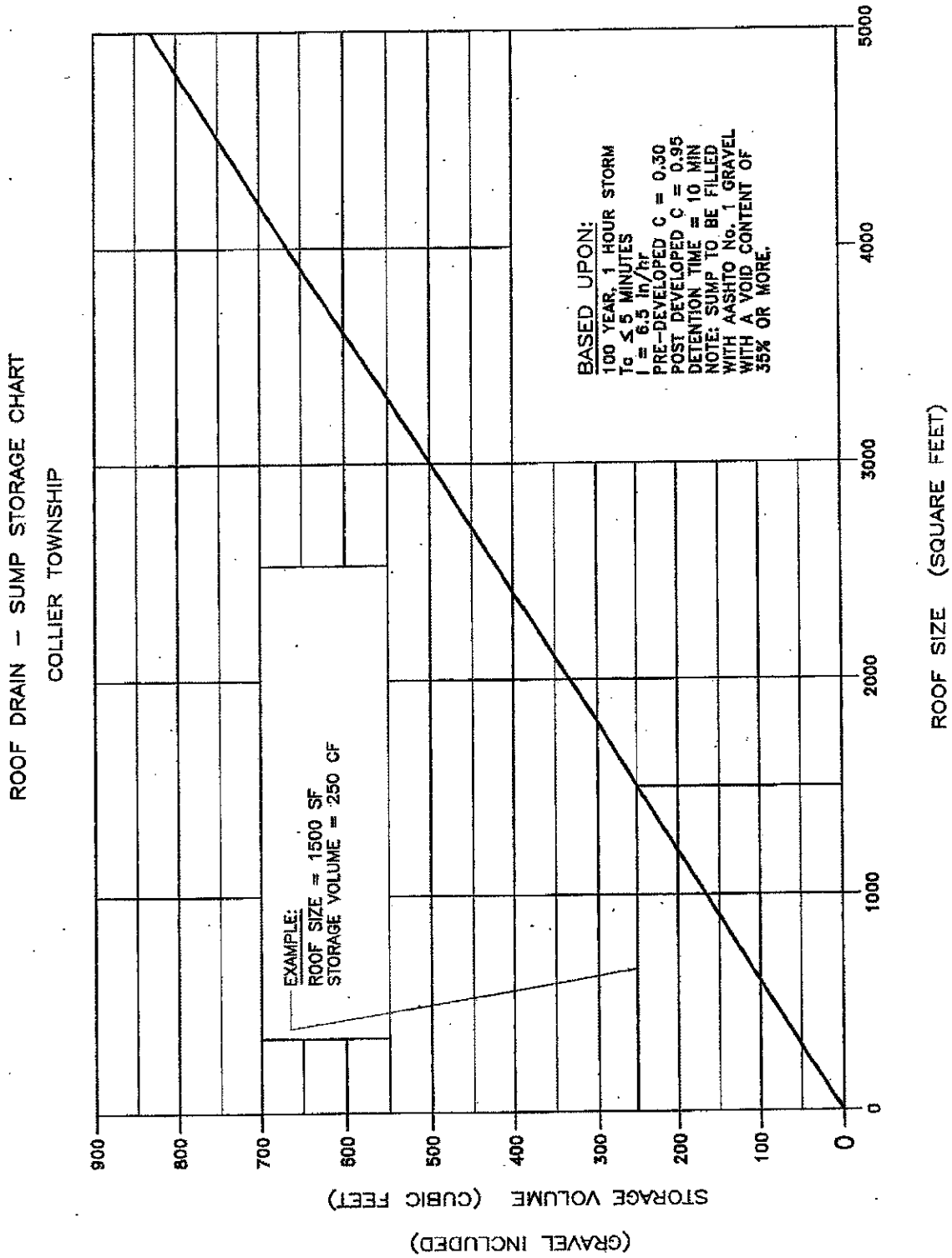

Scale:		N.T.S.	Township of Collier Standard Details
Drwn By:	Chkd By:	Appd By:	Detail SWM-6A
Filename:	Collierdet–1.dwg		Roof Drain/Sump Storage Chart (100-Year Storm Event Design)
Date:	December 2008		

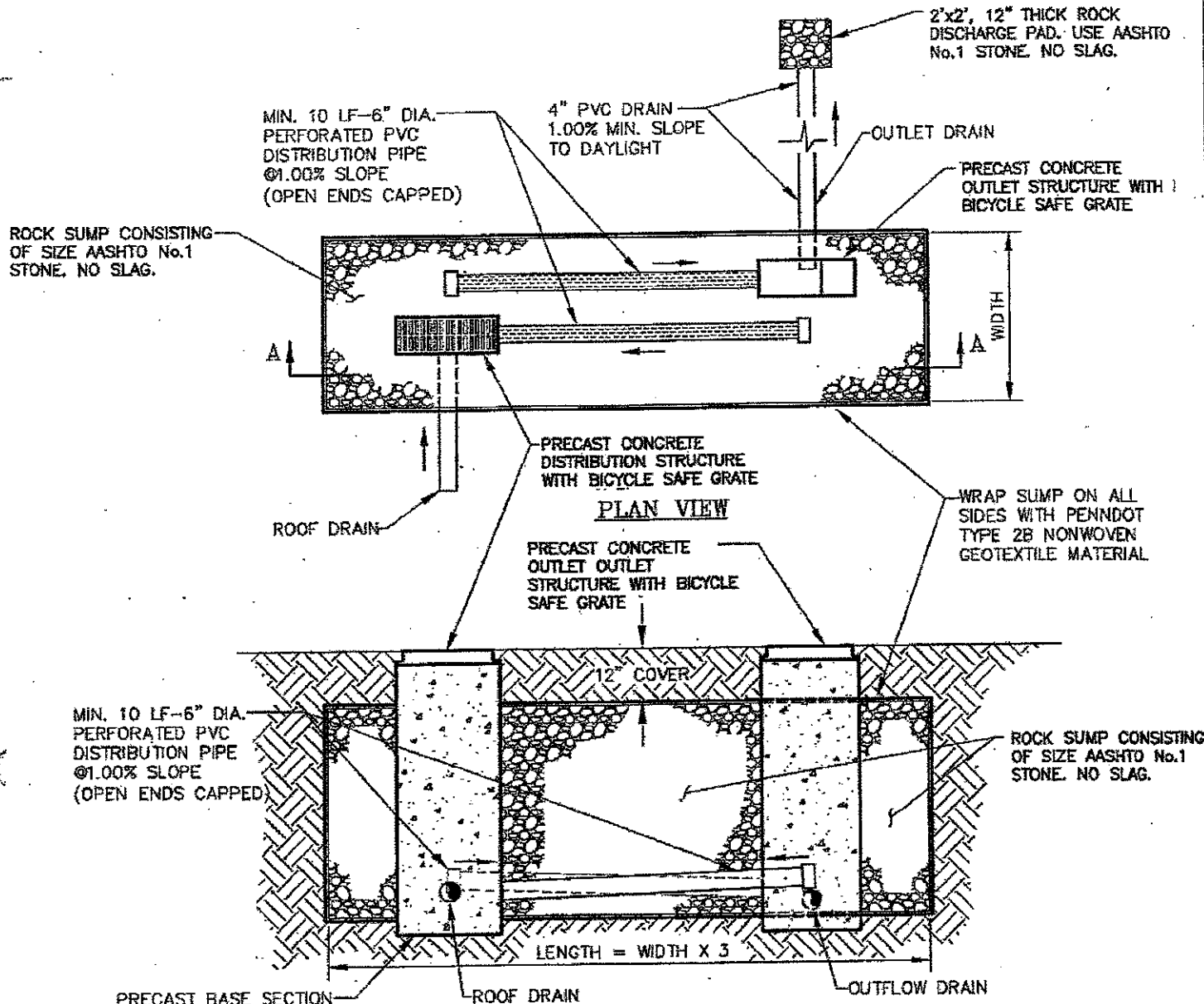

NOTES:

1. VOLUME OF ROCK SUMP TO BE DETERMINED BY THE CHART ON THE OUTLET STRUCTURE DETAIL SHEET.
2. ROCK SUMP TO BE CONSTRUCTED A MINIMUM OF 50' FROM SEPTIC DRAINFIELDS. OUTFLOW DRAIN TO BE PLACED DOWNSTREAM OF SEPTIC DRAINFIELDS.
3. PROVIDE BICYCLE SAFE GRATE.
4. CALCULATIONS MUST BE PROVIDED BY DESIGN ENGINEER TO ENSURE ADEQUATE SIZING OF ROCK SUMP.

Scale: N.T.S.		Township of Collier Standard Details
Drwn By:	Chkd By: / Appd By:	Detail SWM-7 Roof Drain Sump
Filename: Collierdet-1.dwg		
Date: December 2008		

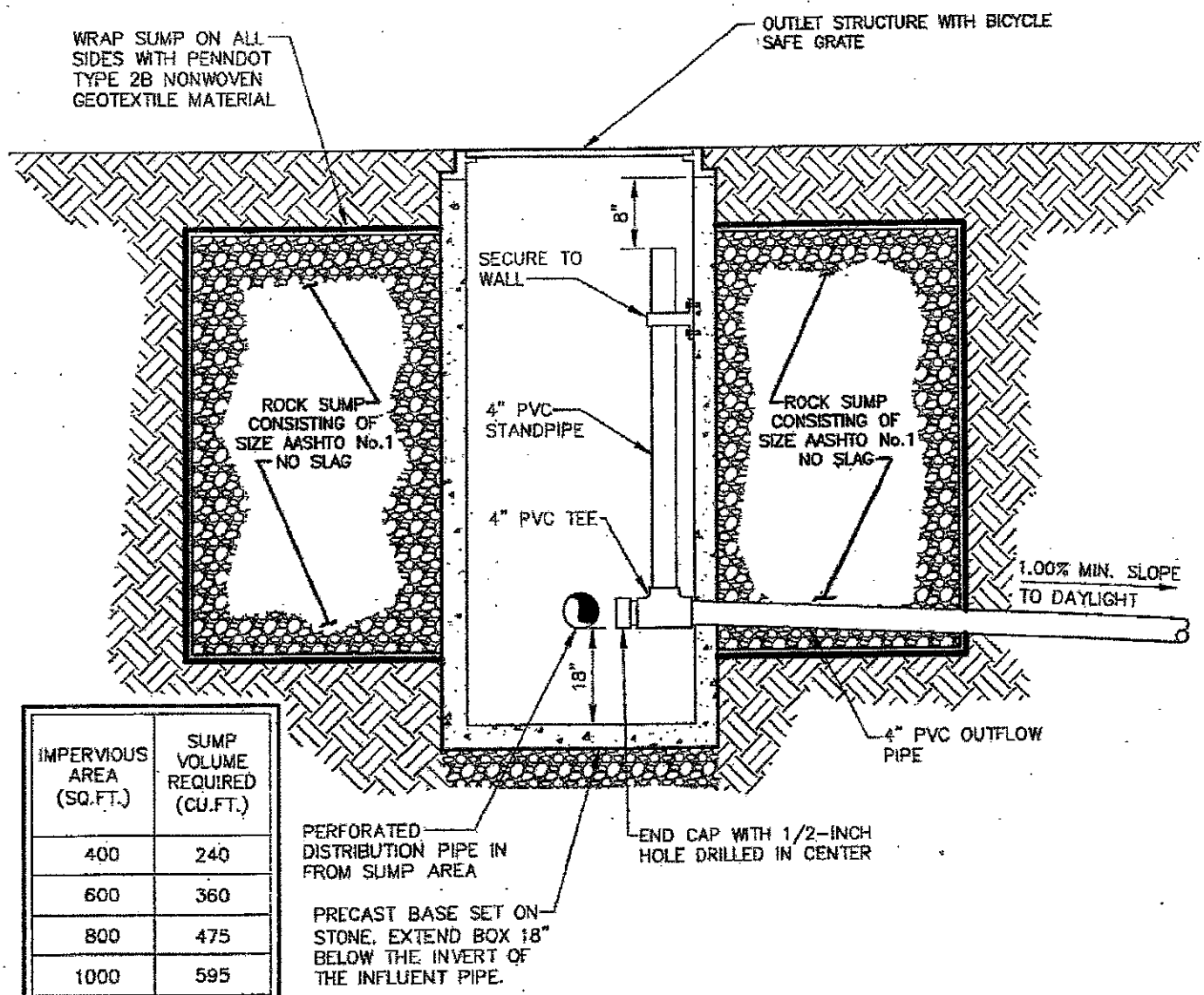

IMPERVIOUS AREA (SQ.FT.)	SUMP VOLUME REQUIRED (CU.FT.)
400	240
600	360
800	475
1000	595
1200	715
1400	835
1600	950
1800	1070
2000	1190
2200	1310
2400	1430
2600	1545
2800	1665
3000	1785

NOTES:

1. OUTLET & DISTRIBUTION STRUCTURE SIZES:
   - LESS THAN 5 FEET DEEP, USE PRECAST 2'x2' INLET BOX
   - OVER 5 FEET DEEP, USE PRECAST 2'x4' INLET BOX
2. PROVIDE BICYCLE SAFE GRATE
3. INLET BOXES GREATER THAN FIVE FEET IN DEPTH MUST HAVE STEPS 16" CENTER TO CENTER. STEPS SHALL BE STEEL, ENCASED IN POLYPROPYLENE PLASTIC AND MUST MEET ASTM D4101-82 REQUIREMENTS. THE STEEL SHALL BE A DEFORMED 1/2-INCH DIA. REINFORCING ROD, GRADE 60 CONFORMING TO ASTM A-615.
4. CALCULATIONS MUST BE PROVIDED BY DESIGN ENGINEER TO ENSURE ADEQUATE SUMP SIZE.

Scale: N.T.S.		Township of Collier Standard Details
Drwn By:	Chkd By: / Appd By:	Detail SWM-7A
Filename: Collierdet-1.dwg		Roof Drain Sump Outlet Structure
Date: December 2008		

DESIGN OF OUTLET PROTECTION FROM A ROUND PIPE FLOWING FULL
MINIMUM TAILWATER CONDITION (T_W<0.5 DIAMETER)

Source: USDA-SCS

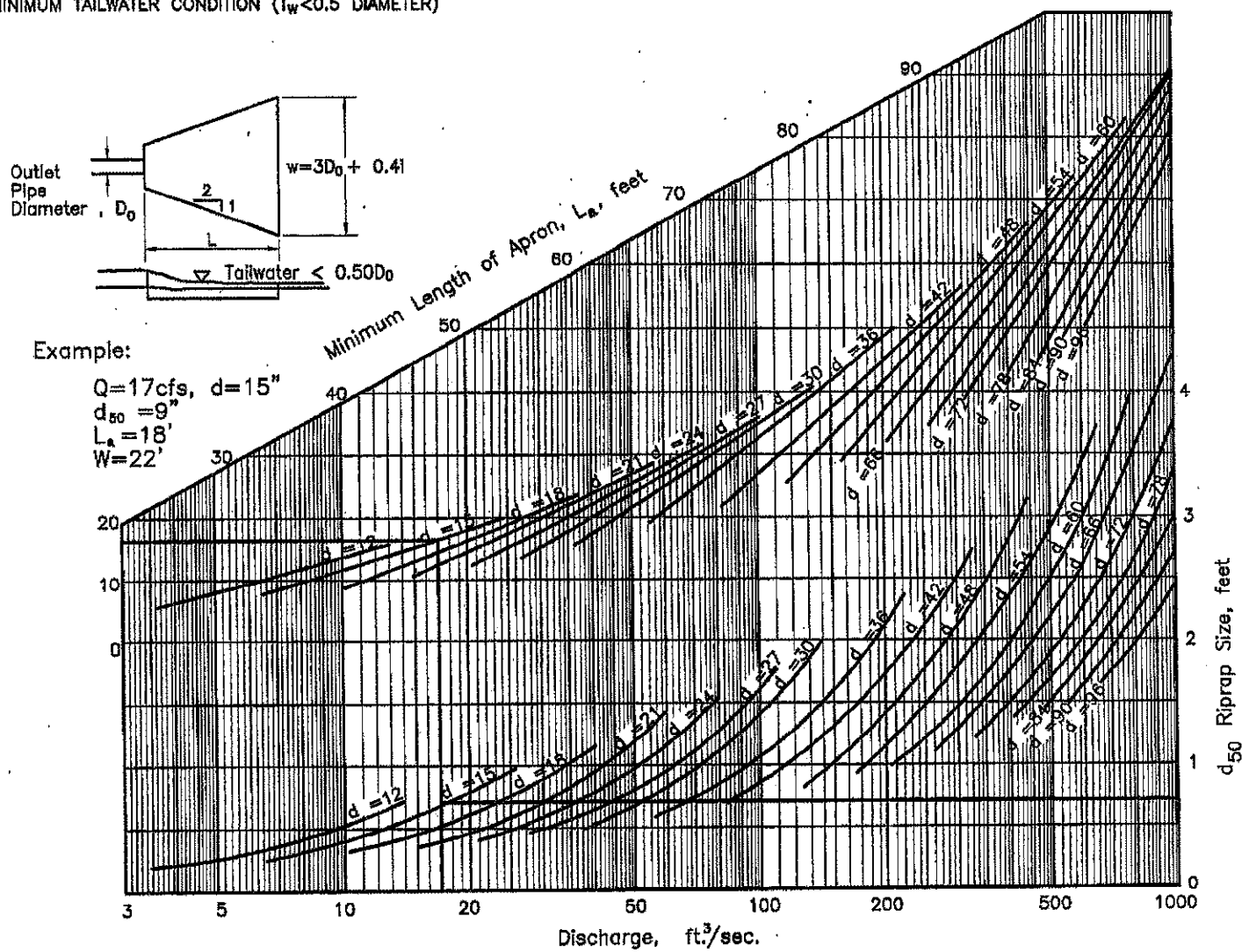

Scale:	N.T.S.
Drwn By:	
Chkd By:	
Appd By:	
Filename:	Collierdet-1.dwg
Date:	December 2008

Township of Collier
Standard Details
Detail SWM-8
Outlet Protection (Minimum Tailwater Conditions)

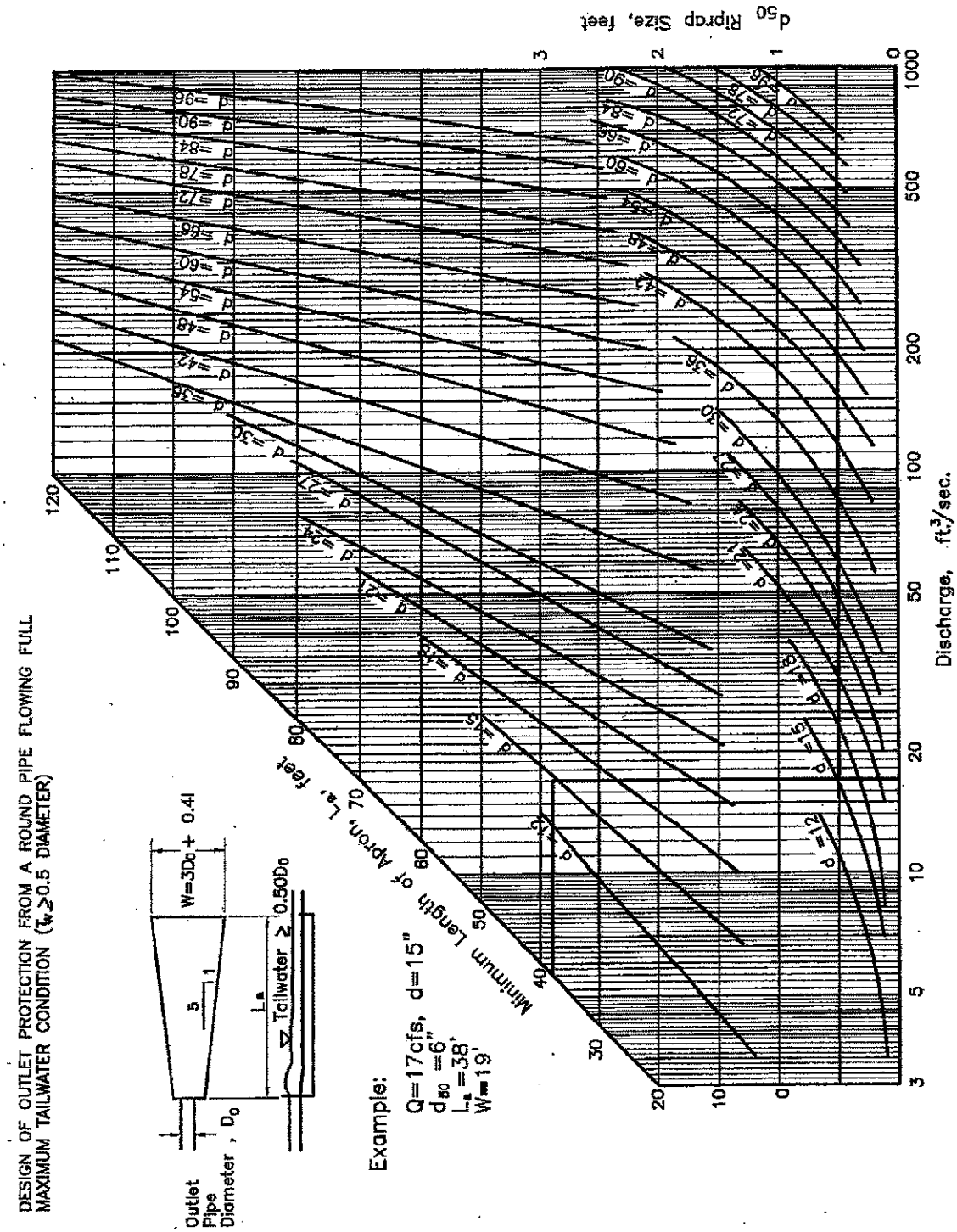

Source: USDA–SCS

Scale: N.T.S.		Township of Collier Standard Details
Drwn By:	Chkd By:	Appd By:	Detail SWM-8A
Filename: Collierdet–1.dwg		Outlet Protection (Maximum Tailwater Conditions)
Date: December 2008		

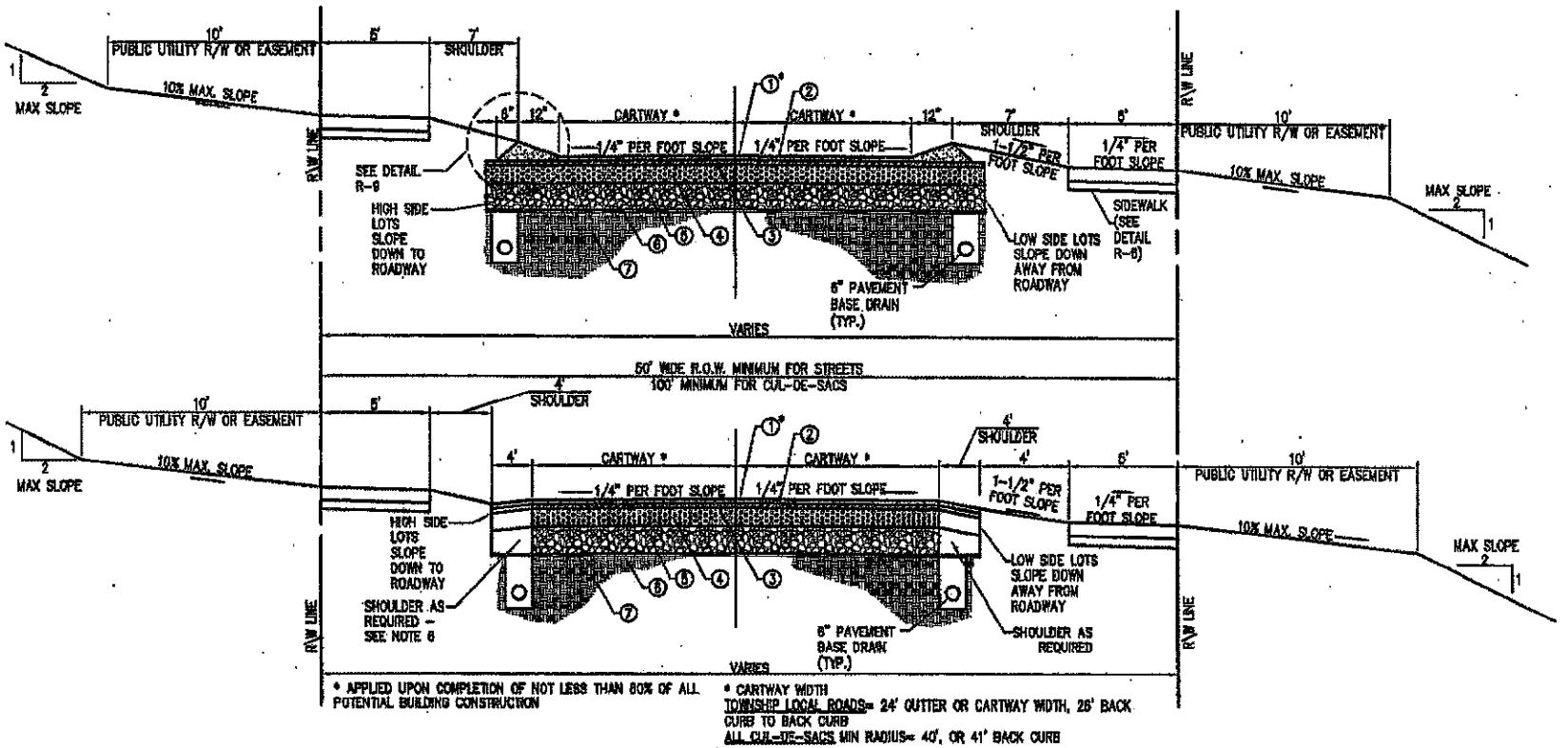

NOTES:

1. FOR PAVING SPECIFICATIONS, ①, ②, ③, ④, ⑤, ⑥, AND ⑦, SEE DETAIL R-2.
2. UNDERDRAIN SHALL BE INSTALLED ON BOTH SIDES IN ALL CASES.
3. THE DEVELOPER SHALL INDICATE UNDERDRAIN LOCATIONS ON THE PLANS.
4. SLAG IS NOT PERMITTED AS BACKFILL.
5. 100% STONE BACKFILL IS REQUIRED FULL WIDTH OF RIGHT-OF-WAY.
6. SHOULDER MATERIAL TO BE 8" DEPTH PennDOT 2A STONE WITH MC-70 SURFACE TREATMENT.

Scale: N.T.S.
Drwn By: Chkd By: Appd By:
Filename: Colliercdet-1.dwg
Date: December 2008

Township of Collier
Standard Details
Detail R-1
Typical Cross-Section Local Roadway-Conventional Subdivision

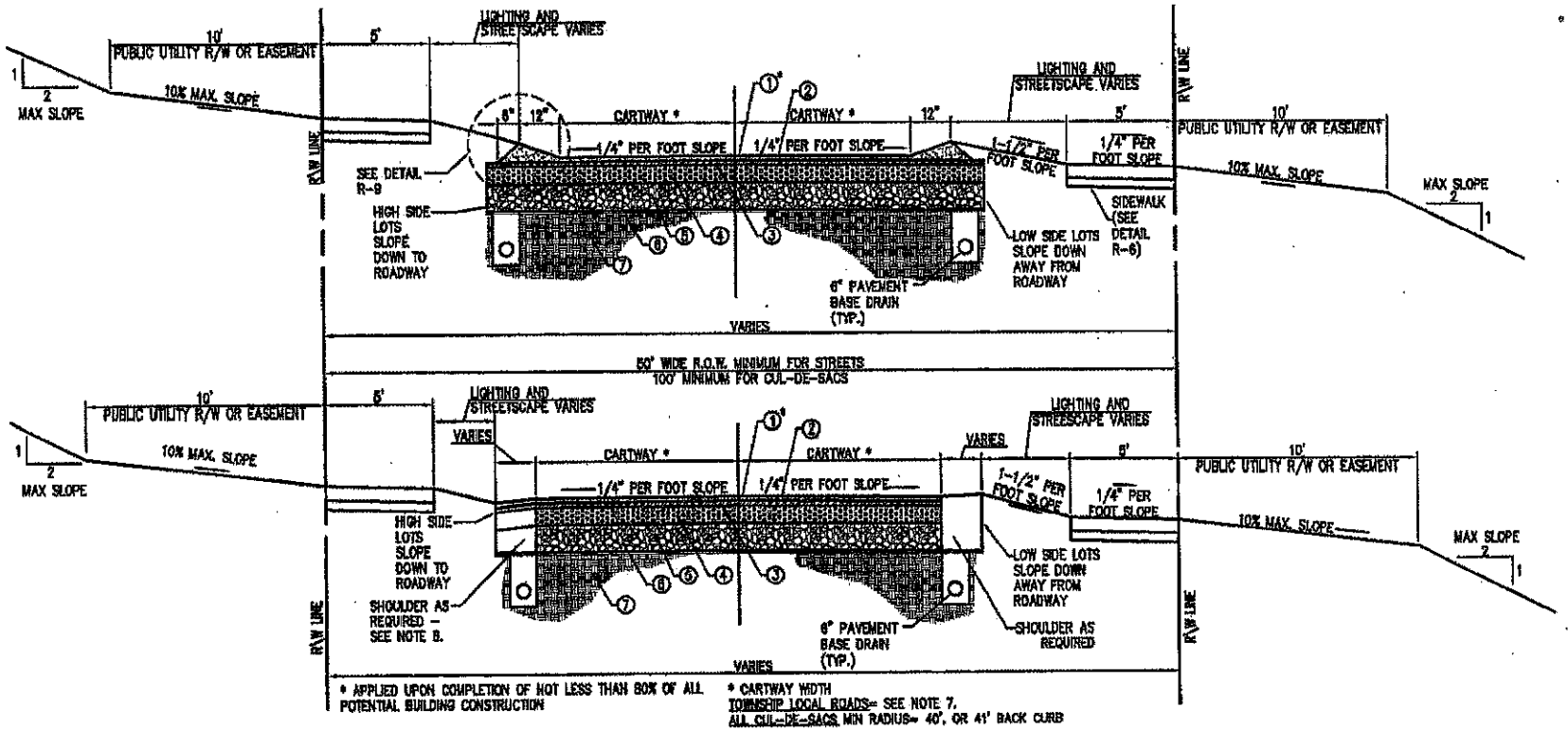

NOTES:

1. FOR PAVING SPECIFICATIONS, ①, ②, ③, ④, ⑤, ⑥ AND ⑦, SEE DETAIL R-2.
2. UNDERDRAIN SHALL BE INSTALLED ON BOTH SIDES IN ALL CASES.
3. THE DEVELOPER SHALL INDICATE UNDERDRAIN LOCATIONS ON THE PLANS.
4. SLAG IS NOT PERMITTED AS BACKFILL.
5. 100% STONE BACKFILL IS REQUIRED FULL WIDTH OF RIGHT-OF-WAY.
6. SHOULDER MATERIAL TO BE 8" DEPTH PennDOT 2A STONE WITH MC-70 SURFACE TREATMENT.
7. UNDER ADT OF 50; 18' WIDTH CARTWAY WITH 2' STONE SHOULDER OR 12" WEDGE CURBS. ABOVE ADT OF 50; 20' WIDTH CARTWAY WITH 4' STONE SHOULDERS OR 12" WEDGE CURBS, INCLUDES INTERSECTION RADIUS OF 25'.

Scale: N.T.S.
Drwn By:
Chkd By:
Appd By:
Filename: Collierdet-1.dwg
Date: December 2008

Township of Collier
Standard Details
Detail R-1A
Typical Cross-Section Local Roadway-Conservation Subdivision

NOTES

1. MATERIALS AND CONSTRUCTION IN ACCORDANCE WITH PENNDOT FORM 408 (LATEST ADDITION)
2. THE PREPARED SUBGRADE SHALL BE APPROVED BY THE TOWNSHIP PRIOR TO PLACEMENT OF THE GEOTEXTILE FABRIC. THE SUBGRADE SHALL BE PROOF ROLLED IN THE PRESENCE OF THE TOWNSHIP ENGINEER WITH FULLY LOADED TRIAXLE TRUCK. AREAS OF UNSUITABLE SUBGRADE SHALL BE EXCAVATED AND STABILIZED BY BACKFILLING SUCH AREAS WITH AASHTO NO.1 COARSE AGGREGATE AS DIRECTED OR OTHERWISE REQUIRED TO ACHIEVE STABILIZATION.
3. IF NECESSARY ALL UNEVEN AREAS, AREAS DAMAGED BY UTILITY COMPANIES AND OTHER BROKEN OR UNEVEN AREAS SHALL BE PREPARED THEN LEVELED WITH ID-2 BITUMINOUS WEARING COARSE OR BINDER COARSE AS DIRECTED BY THE TOWNSHIP PRIOR TO THE PLACEMENT OF THE FINAL WEARING SURFACE (1).
4. GUTTER CROSS SECTION AND SURFACE COMPOSITION TO BE APPROVED BY TOWNSHIP.
5. SURFACE COMPOSITION OF GUTTERS TO BE SELECTED BASED UPON VELOCITY AS PER THE SUBDIVISION AND LAND DEVELOPMENT ORDINANCE.
6. SHOULDERS TO BE STONE, EARTHEN OR PENNDOT TYPE 3 IN ACCORDANCE WITH THE SUBDIVISION AND LAND DEVELOPMENT ORDINANCES AND APPROVED BY THE TOWNSHIP.
7. STONE SHOULDERS TO BE 6" SUBBASE MATERIAL (MINIMUM) AND PENNDOT TYPE 3 SHOULDER TO BE 6" SUBBASE MATERIAL (MINIMUM) WITH BITUMINOUS SURFACE TREATMENT.
8. PRIVATE STREETS TO BE CONSTRUCTED IN CONFORMANCE WITH LOCAL ROADWAY DESIGN CRITERIA.
9. ALL CHANGES IN VERTICAL ROADWAY ALIGNMENT SHALL BE CONNECTED BY A VERTICAL CURVE EITHER CREST OR SAG & SHALL INCLUDE DESIGN CRITERIA SUCH AS VERTICAL CURVE LENGTH VPI, VPC, VPT ELEVATIONS, MIDDLE ORDINATE SIGHT AND STOPPING DISTANCE AND HIGH & LOW POINTS. ALL VERTICAL CURVE DESIGNS SHALL BE IN ACCORDANCE WITH PADOT'S GUIDELINES FOR THE DESIGN OF LOCAL ROADS & STREETS LATEST ADDITION WITH REFERENCE TO PADOT DESIGN MANUAL 2 CHAPTER 2 & AASHTO GREEN BOOK TITLED A POLICY ON GEOMETRIC DESIGN OF HIGHWAY AND STREETS.
10. ALL ACCESS DRIVES & DRIVEWAYS ENTERING TOWNSHIP STREETS SHALL COMPLY WITH ACCESS CONTROL STANDARDS & REQUIREMENTS OF THE PENNSYLVANIA CODE TITLE 67 CHAPTER 441 ACCESS TO AND OCCUPANCY OF HIGHWAYS BY DRIVEWAYS & LOCAL ROADS LATEST EDITION.
11. SERVICE STREETS SAME AS LOCAL STREETS.
12. ALL BITUMINOUS MIX DESIGNS MUST MEET CURRENT PADOT SUPERPAVE REQUIREMENTS. SUBMISSION OF PAVEMENT DESIGN BASED UPON AVERAGE DAILY TRAFFIC AND ESAL LOADING COUNTS IS REQUIRED. SEPARATE MIX DESIGNS REQUIRED FOR INITIAL SURFACE AND FINAL SURFACE.
13. DO NOT PLACE BITUMINOUS PAVING MIXTURES FROM OCT. 15TH TO MARCH 31ST. ALSO FOLLOW COLD WEATHER PLACEMENT TEMPERATURES AS OUTLINED IN PADOT PUBLICATION 408. NO EXCEPTIONS TO PAVING DEADLINE WILL BE PERMITTED UNLESS WRITTEN AUTHORIZATION IS GRANTED BY THE TOWNSHIP AS NOTED IN NOTE 14.
14. MAXIMUM EXTENSION PERMITTED FOR BITUMINOUS PAVING DEADLINE WILL BE 30 DAYS NOT TO GO BEYOND NOV. 15TH NO EXCEPTIONS.
15. BITUMINOUS WEARING COURSE MUST HAVE A SKID RESISTANCE LEVEL (SRL) OF H MINIMUM OR HIGHER.
16. ALL THICKNESS'S AS LISTED ARE COMPACTED THICKNESS TO DENSITY AS LISTED IN PennDOT PUBLICATION 408.
17. ALL INLETS AND MANHOLES MUST BE ADJUSTED FOR PROFILE AND CROSS SLOPE PRIOR TO INSTALLING FINAL WEARING SURFACE. INITIAL SUPERPAVE WEARING COURSE MUST FINISH FLUSH WITH ALL MANHOLES AND INLETS. FINAL ADJUSTMENTS TO BE COMPLETE PRIOR TO FINAL WEARING SURFACE INSTALLATION. KEYWAYS AROUND STRUCTURES WILL NOT BE PERMITTED.
18. AS DIRECTED BY TOWNSHIP ALL UNEVEN AREAS, SETTLED AREAS, DAMAGED BY UTILITY COMPANIES AND OTHER BROKEN OR UNEVEN AREAS SHALL BE REPAIRED AND LEVELING WITH SUPERPAVE HMA WEARING COURSE (FINE GRADED) PRIOR TO FINAL BITUMINOUS WEARING COURSE APPLICATION, INSTALLED ON ENTIRE ROADWAY. SUBBASE ALTERNATE TO BE SELECTED AND APPROVED BY THE TOWNSHIP BASED UPON FIELD CONDITIONS.

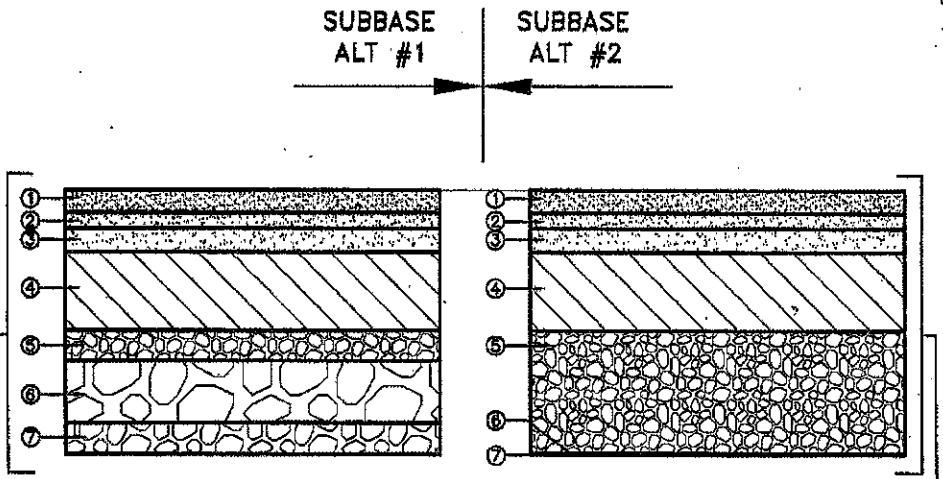

ALT 1

1. 1 1/2" OF SUPERPAVE HMA WEARING COURSE 9.5mm, SRL-H (PENNDOT 408, SECTION 420) AFTER 80% OF CONSTRUCTION COMPLETED OR AFTER 2 YEARS IF APPROVED BY SUPERVISORS, AND
2. LEVELING AS DIRECTED BY TOWNSHIP ENGINEER.
3. 1 1/2" OF SUPERPAVE HMA WEARING COURSE 9.5mm, SRL-H (COMPACTED THICKNESS) PENNDOT 408 SECTION 409
4. 5" (COMPACTED THICKNESS) SUPERPAVE HMA BASE COURSE, 25mm (PENNDOT 408, SECTION 309)
5. 2" OF 2A PADOT SUBBASE
6. 4" OF AASHTO No.1
7. 2" OF 2A PADOT SUBBASE INVERTED CHOKE

8" TOTAL THICKNESS OF SUBBASE AND CLASS IV FABRIC

ALT 2

1. 1 1/2" SUPERPAVE HMA WEARING COURSE 9.5mm, PENNDOT 408 SECTION 409 (COMPACTED THICKNESS), SRL-H (AFTER 80% CONSTRUCTION COMPLETED OR AFTER 2 YEARS IF APPROVED BY SUPERVISORS)*
2. LEVELING COURSE. SUPERPAVE HMA WEARING-FINE GRADED (AS DIRECTED BY TOWNSHIP ENGINEER)
3. 1 1/2" SUPERPAVE HMA WEARING COURSE 9.5mm, SRL-H (COMPACTED THICKNESS)
4. 5" (COMPACTED THICKNESS) SUPERPAVE HMA BASE COURSE, 25mm, PENNDOT 408 SECTION 309.
5. 8" PaDOT 2A SUBBASE (COMPACTED THICKNESS) (2 COMPACTED LIFTS)
6. CLASS 1V FABRIC
7. COMPACTED SUBGRADE, PROOF ROLLED WITH LOADED TRIAXIAL 70,000# MIN. WEIGHT AND FREE OF "BIRD BATHS"

Scale: N.T.S.
Drwn By: | Chkd By: | Appd By:
Filename: Colliersdet-1.dwg
Date: December 2008

Township of Collier
Standard Details
Detail R-2
Roadway Notes

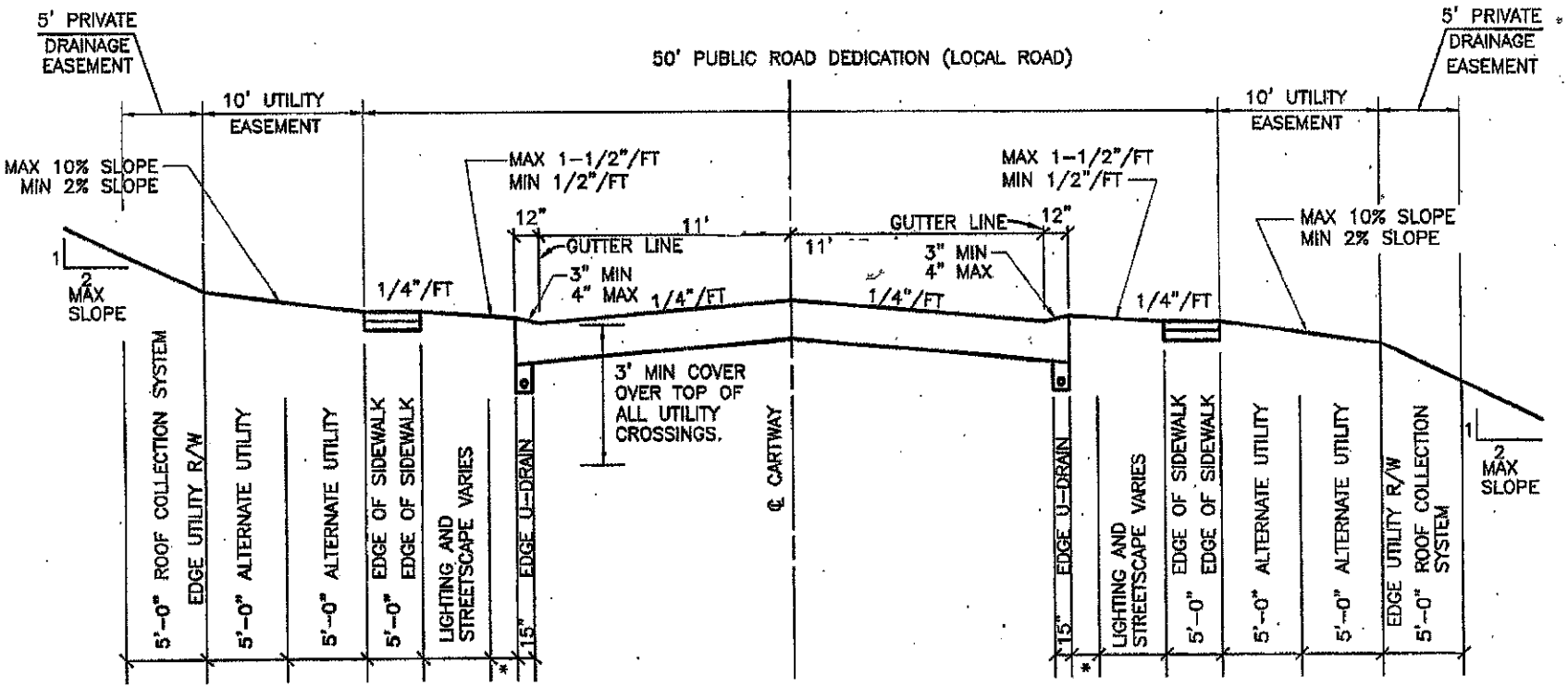

* NO EXCAVATION ALLOWED/ DIMENSION VARIES

NOTES:

1. THESE LOCATIONS ARE TYPICAL FOR STRAIGHT AWAY – SITE AND/OR EXISTING CONDITIONS AT TIME OF INSTALLATION MAY WARRANT CHANGES. ANY CHANGES MUST BE INDICATED ON SPECIFIC CONSTRUCTION DOCUMENTS WITH PRIOR APPROVAL OF TOWNSHIP IN WRITING. SUBMIT CROSS-SECTION SHOWING LOCATIONS FOR APPROVAL.
2. UNDERDRAIN SHALL BE INSTALLED ON BOTH SIDES IN ALL CASES.
3. THE DEVELOPER SHALL INDICATE UNDERDRAIN LOCATIONS ON THE PLANS.
4. SLAG IS NOT PERMITTED AS BACKFILL.
5. 100% STONE BACKFILL IS REQUIRED FULL WIDTH OF RIGHT-OF-WAY.
6. IN SETTING MAIL BOX POST DO NOT DAMAGE FRENCH DRAIN. SET BOTTOM POST A MAXIMUM OF 20" BELOW CURB. DO NOT PERMIT CONCRETE COLLAR TO EXCEED 12" BELOW TOP OF CURB. MAIL BOX SHALL BE MAXIMUM 4x4 WOOD POST (OR TOWNSHIP APPROVED EQUAL). BRICK AND CONCRETE PILLARS ARE NOT PERMITTED.
7. SANITARY SEWER LOCATION TO BE DETERMINED DURING APPROVAL PROCESS.
8. ALL UTILITY CROSSINGS MUST BE MADE PERPENDICULAR TO THE ROAD CARTWAY.
9. ALL UTILITY LINES MUST BE STAKED IN THE FIELD AND REVIEWED BY THE TOWNSHIP PRIOR TO INSTALLATION OF THE UTILITY.
10. SANITARY LOCATION TO BE IN EITHER UTLITY EASEMENT OR UNDER SIDEWALK.

Scale: N.T.S.
Drwn By: Chkd By: Appd By:
Filename: Colliercet-1.dwg
Date: December 2008

Township of Collier
Standard Details
Detail R-3
Typical Utility Locations
Conventional

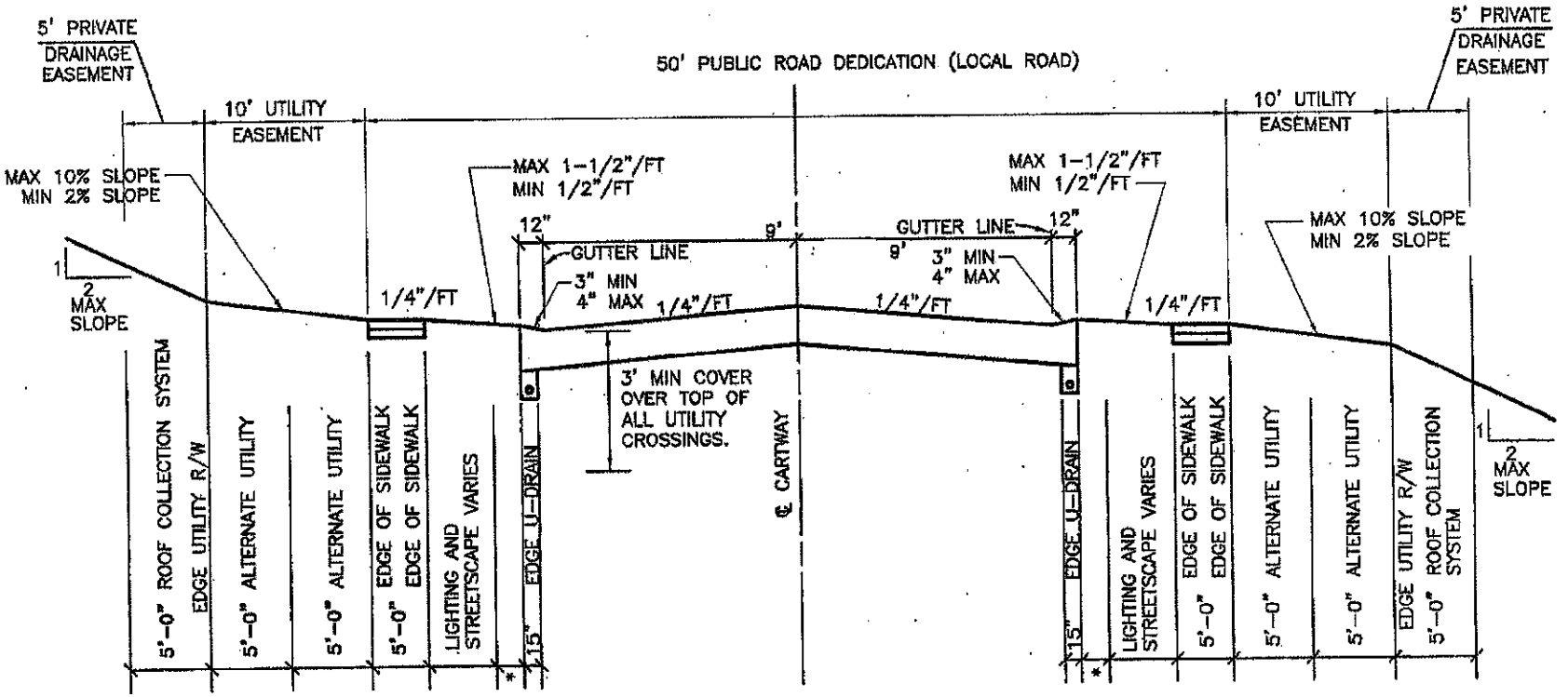

* NO EXCAVATION ALLOWED/ DIMENSION VARIES

NOTES:

1. THESE LOCATIONS ARE TYPICAL FOR STRAIGHT AWAY – SITE AND/OR EXISTING CONDITIONS AT TIME OF INSTALLATION MAY WARRANT CHANGES. ANY CHANGES MUST BE INDICATED ON SPECIFIC CONSTRUCTION DOCUMENTS WITH PRIOR APPROVAL OF TOWNSHIP IN WRITING. SUBMIT CROSS-SECTION SHOWING LOCATIONS FOR APPROVAL.
2. UNDERDRAIN SHALL BE INSTALLED ON BOTH SIDES IN ALL CASES.
3. THE DEVELOPER SHALL INDICATE UNDERDRAIN LOCATIONS ON THE PLANS.
4. SLAG IS NOT PERMITTED AS BACKFILL.
5. 100% STONE BACKFILL IS REQUIRED FULL WIDTH OF RIGHT-OF-WAY.
6. IN SETTING MAIL BOX POST DO NOT DAMAGE FRENCH DRAIN. SET BOTTOM POST A MAXIMUM OF 20" BELOW CURB. DO NOT PERMIT CONCRETE COLLAR TO EXCEED 12" BELOW TOP OF CURB. MAIL BOX SHALL BE MAXIMUM 4x4 WOOD POST (OR TOWNSHIP APPROVED EQUAL). BRICK AND CONCRETE PILLARS ARE NOT PERMITTED.
7. SANITARY SEWER LOCATION TO BE DETERMINED DURING APPROVAL PROCESS.
8. ALL UTILITY CROSSINGS MUST BE MADE PERPENDICULAR TO THE ROAD CARTWAY.
9. ALL UTILITY LINES MUST BE STAKED IN THE FIELD AND REVIEWED BY THE TOWNSHIP PRIOR TO INSTALLATION OF THE UTILITY.
10. SANITARY LOCATION TO BE IN EITHER UTLITY EASEMENT OR UNDER SIDEWALK.

Scale: N.T.S.
Drwn By: Chkd By: Appd By:
Filename: Colliercdet-1.dwg
Date: December 2008

Township of Collier
Standard Details
Detail R-3A
Typical Utility Locations
Conservation

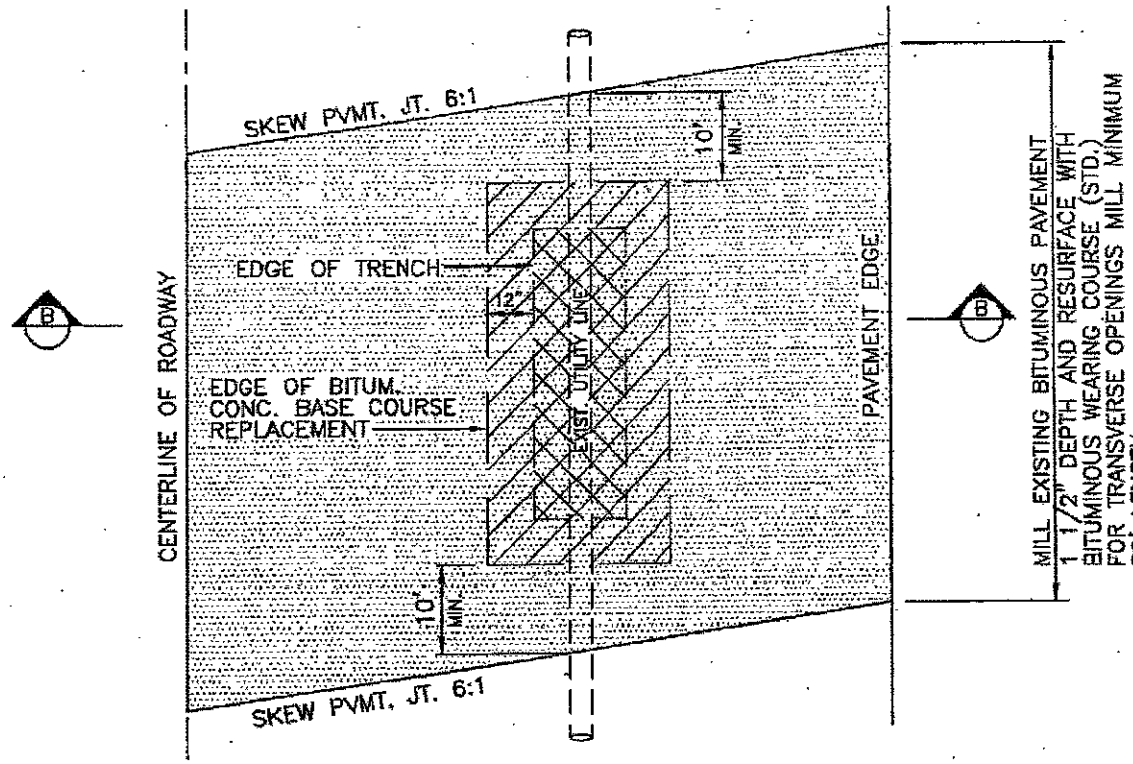

PLAN – PAVEMENT RESTORATION

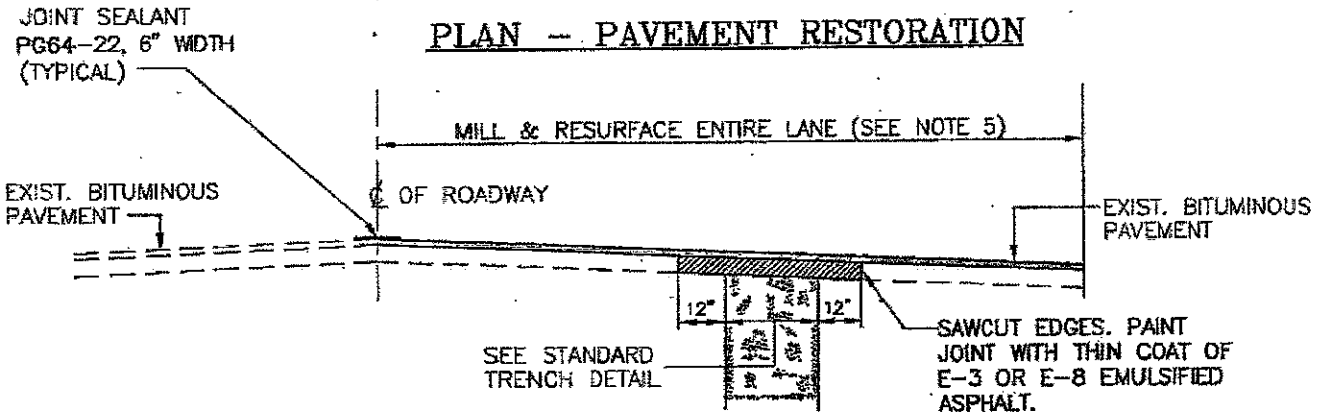

SECTION B–B

NOTE:

1. 2" MINIMUM BITUMINOUS COLD PATCH (TEMPORARY SURFACE) REQUIRED IN TRENCH AREA PRIOR TO FINAL SURFACING.
2. IF UTILITY OPENING EXTENDS INTO OR INVOLVES BOTH LANES THE ENTIRE CARTWAY SHALL BE MILLED AND RESURFACED.
3. THE MINIMUM LENGTH OF THE MILLED AND RESURFACED AREA SHALL BE 20 FEET.
4. ALL PAVEMENT REPLACEMENT THICKNESSES INDICATED ARE MINIMUMS. WHERE THE EXISTING PAVEMENT EXCEEDS THE MINIMUM THICKNESSES INDICATED, THE PAVEMENT SHALL BE REPLACED BY MATCHING THE EXISTING PAVEMENT THICKNESS.
5. WHERE APPROVED, THE LANE MAY BE REMOVED BY OTHER METHODS AND REPLACED AS INDICATED.

1–1/2" SUPERPAVE HMA BITUMINOUS WEARING COURSE 9.5mm, SRL–H, PennDOT SECT. 409.

4–1/2" SUPERPAVE HMA BASE COURSE, 25mm, PennDOT SECT. 309.

Scale: N.T.S.		Township of Collier Standard Details
Drwn By:	Chkd By:	Appd By:
Filename: Collierdet–1.dwg		Detail R-4 Bituminous Pavement Restoration
Date: December 2008		

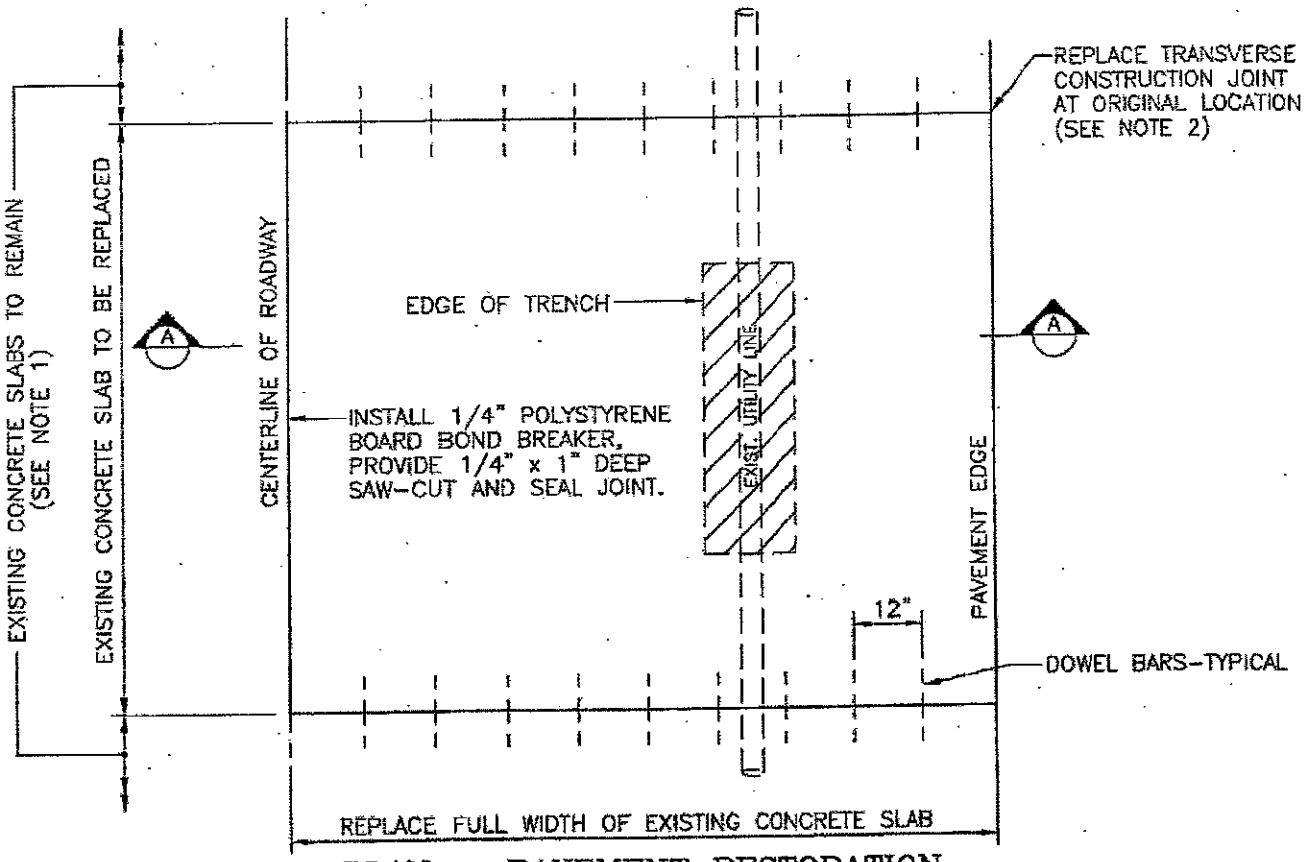

PLAN – PAVEMENT RESTORATION

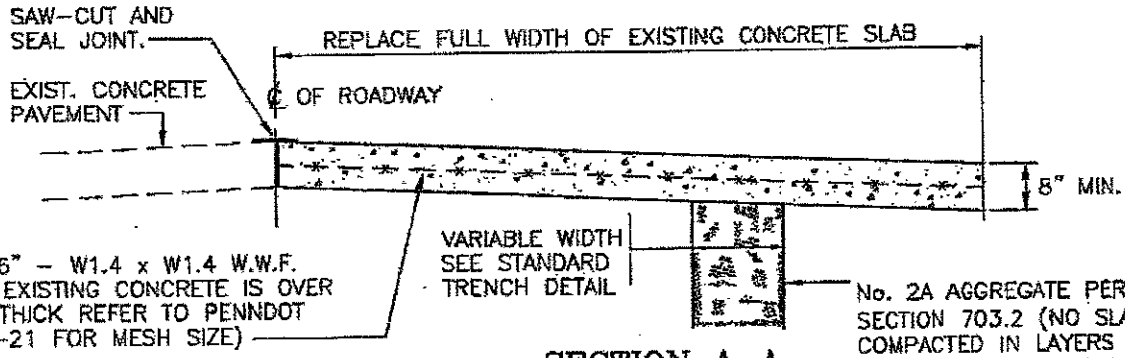

SECTION A–A

NOTE:

1. IF EXCAVATION EXTENDS INTO OR IF THE APPLICANTS OPERATIONS CAUSE DAMAGE TO AN ADJACENT SLAB THE FULL WIDTH OF THE SLAB SHALL BE REPLACED.
2. TRANSVERSE JOINTS MAY BE RELOCATED WHEN LESS THAN ONE-HALF OF THE LENGTH OF A SLAB IS AFFECTED BY THE OPENING. IN NO CASE SHALL A RELOCATED TRANSVERSE JOINT RESULT IN A SLAB LENGTH LESS THAN 6 FEET.
3. WHEN MORE THAN ONE SLAB LENGTH IS REPLACED THE NEW TRANSVERSE JOINTS SHALL CONFORM WITH PENNDOT RC-20 (TYPE E) WHERE REPLACEMENT SLABS ABUT EXISTING SLABS, IN THE SAME LANE, THE TRANSVERSE JOINTS SHALL CONFORM TO THE PATCHING JOINT DETAILS 'A' AND 'B' PER PENNDOT RC-26, SHEET 1 OF 5.

8" MINIMUM "AA" CEMENT CONCRETE OR MATCH EXISTING THICKNESS

NO.2A AGGREGATE PER PENNDOT SECTION 703.2 (NO SLAG)

Scale: N.T.S.		Township of Collier Standard Details
Drwn By:	Chkd By:	Appd By:
Filename: Collierdet-1.dwg		Detail R-4A Concrete Pavement Restoration
Date: December 2008		

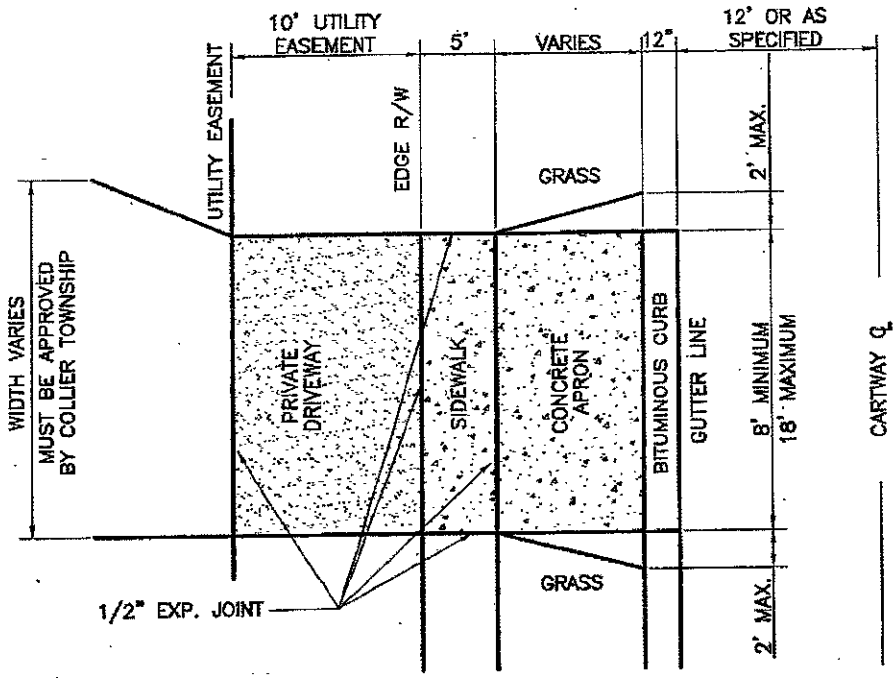

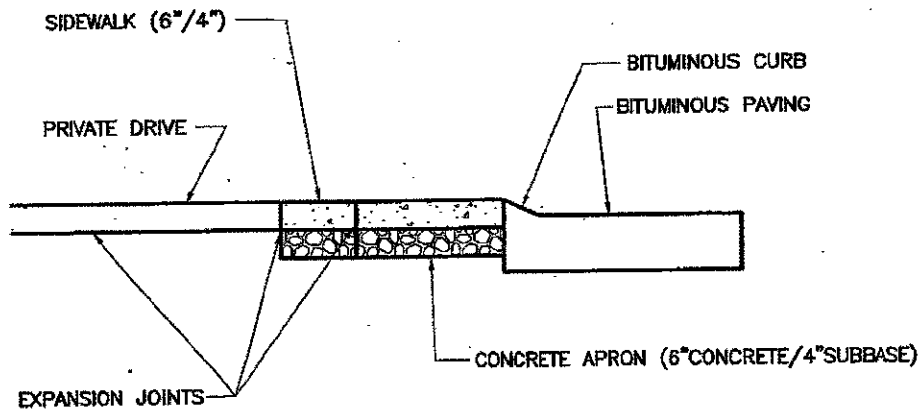

NOTES:

1. SIDEWALK TO HAVE TROWELED EDGES WITH A STIFF BROOM FINISH.

2. PROVIDE 1/2" EXPANSION JOINT AT NEW SIDEWALK ABUTTING EXIST. SIDEWALK.

3. THE CONCRETE APRON SHALL BE 6" THICK CONCRETE ON A 4" COMPACTED STONE BASE, 4000 PSI CONCRETE PennDOT CLASS "AA" WITH WWF 6 X 6, W4 X W4 REINFORCING OR REBAR.

4. SIDEWALK MAY BY LOWERED IN VICINITY OF APRON SO THAT AN ORDERLY TRANSITION IS POSSIBLE. (ONLY WITH TOWNSHIP APPROVAL)

5. THE DRIVEWAY WITHIN THE UTILITY EASEMENT SHALL NOT EXCEED 10%.

6. THE DEPRESSED SIDEWALK IS NOT TO EXCEED 1/4" PER FOOT LONGITUDINALLY.

7. PREPATORY ON REINFORCEMENT MUST BE INSPECTED BY TWP. PRIOR TO POURING OF CONCRETE.

8. TOWNSHIP CODE ENFORCEMENT OFFICER CAN REQUIRE RESIDENT TO PROVIDE ADDITIONAL ON LOT STORM WATER MANAGEMENT FOR DRIVEWAYS.

Scale: N.T.S.		Township of Collier Standard Details
Drwn By:	Chkd By: / Appd By:	Detail R-5
Filename: Collierdet-1.dwg		Concrete Sidewalk/Driveway Apron
Date: December 2008		

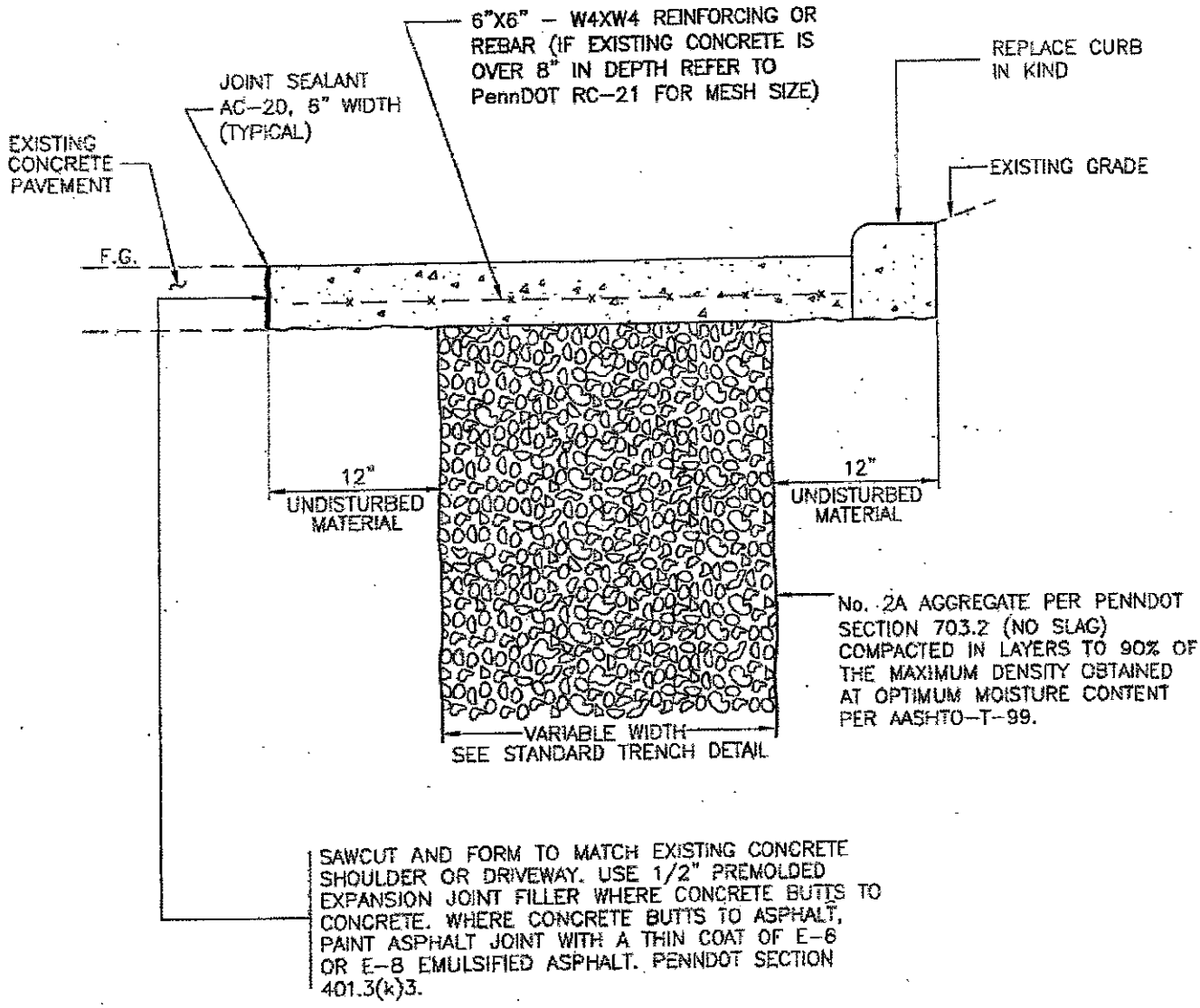

NOTE:

1. TEMPORARY BITUMINOUS COLD PATCH SHALL BE USED IN ALL AREAS WHERE EXISTING RIGID-BASE PAVEMENT HAS BEEN REMOVED.
2. CONSTRUCT TRANSVERSE JOINTS WITH EMBEDDED DOWELS PER PENNDOT RC-26.

8" MINIMUM CLASS 'AA' CEMENT CONCRETE, OR MATCH EXISTING THICKNESS.

No. 2A AGGREGATE PER PENNDOT SECTION 703.2 (NO SLAG).

Scale: N.T.S.		Township of Collier Standard Details
Drwn By:	Chkd By:	Appd By:
Filename: Collierdet-1.dwg		Detail R-5A Concrete Shoulder Restoration
Date: December 2008		

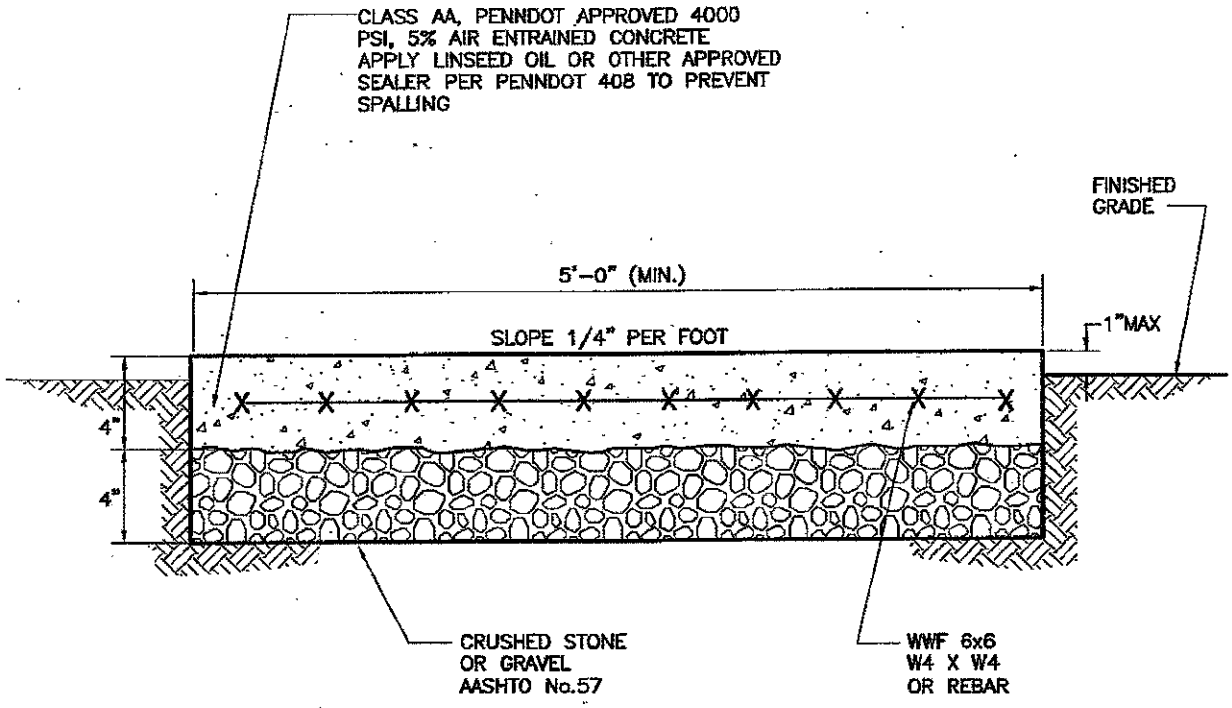

NOTES:

1. WALK SHALL BE CROSS SCORED EVERY FIVE FEET (5'). 1/2" PREFORMED EXPANSION JOINTS EVERY 50 FEET. WALK SHALL HAVE TROWELED EDGES WITH A STIFF BROOM FINISH.
2. IF A DRIVEWAY IS TO BE CONSTRUCTED OVER A SIDEWALK, THE CONCRETE SHALL BE PLACED AT 6" DEPTH; SEE DETAIL R-5.
3. PROVIDE TWO (2) No 4 DOWELS AT PROPERTY LINES
4. PREPATORY WORK ON REINFORCEMENT MUST BE INSPECTED BY TOWNSHIP PRIOR TO POURING OF CONCRETE.

Scale: N.T.S.			Township of Collier Standard Details
Drwn By:	Chkd By:	Appd By:	Detail R-6 Concrete Sidewalk
Filename: Collierdet-1.dwg			
Date: December 2008			

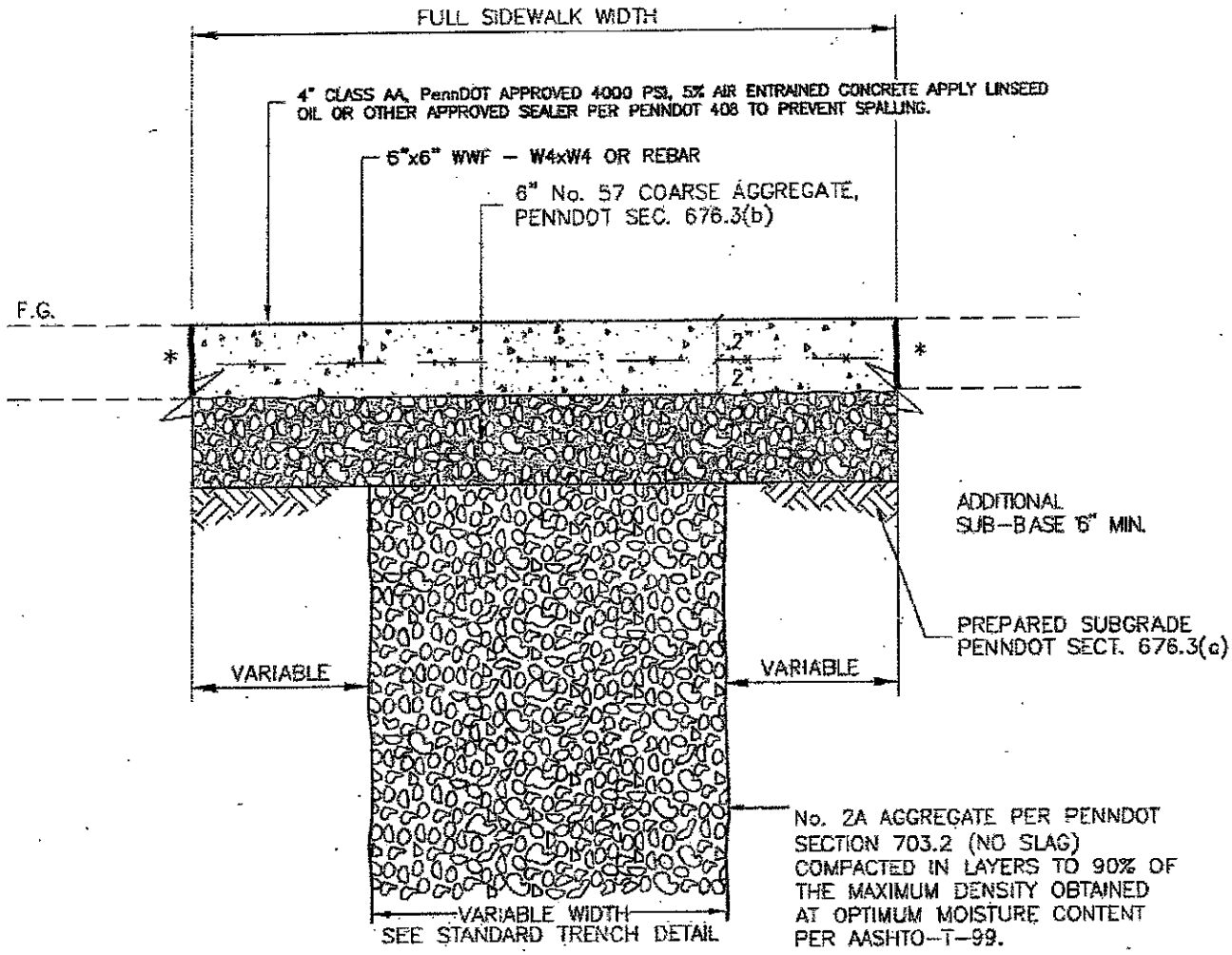

NOTES:

1. FORM OUTSIDE EDGES AND JOINTS WITH 1/4" RADIUS EDGING TOOL.
2. FORM TRANSVERSE DUMMY JOINTS TO MATCH EXISTING JOINT SPACING PATTERN APPROX. 1/8" WIDE AND AT LEAST 1 INCH DEEP.

*3. WHEN BUTTING INTO EXISTING BITUMINOUS, SAWCUT BITUMINOUS AND PAINT BITUMINOUS WITH A THIN COAT OF E-6 OR E-8 EMULSIFIED ASPHALT.

*4. WHEN BUTTING INTO EXISTING CONCRETE, SAWCUT CONCRETE AND USE 1/2" PREMOLDED EXPANSION FILLER FULL DEPTH OF SIDEWALK.

4" CLASS 'AA' CEMENT CONCRETE

6" No. 57 COARSE AGGREGATE (NO SLAG)

Scale: N.T.S.			Township of Collier Standard Details
Drwn By:	Chkd By:	Appd By:	Detail R-6A Concrete Sidewalk Replacement
Filename: Collierdet-1.dwg			
Date: December 2008			

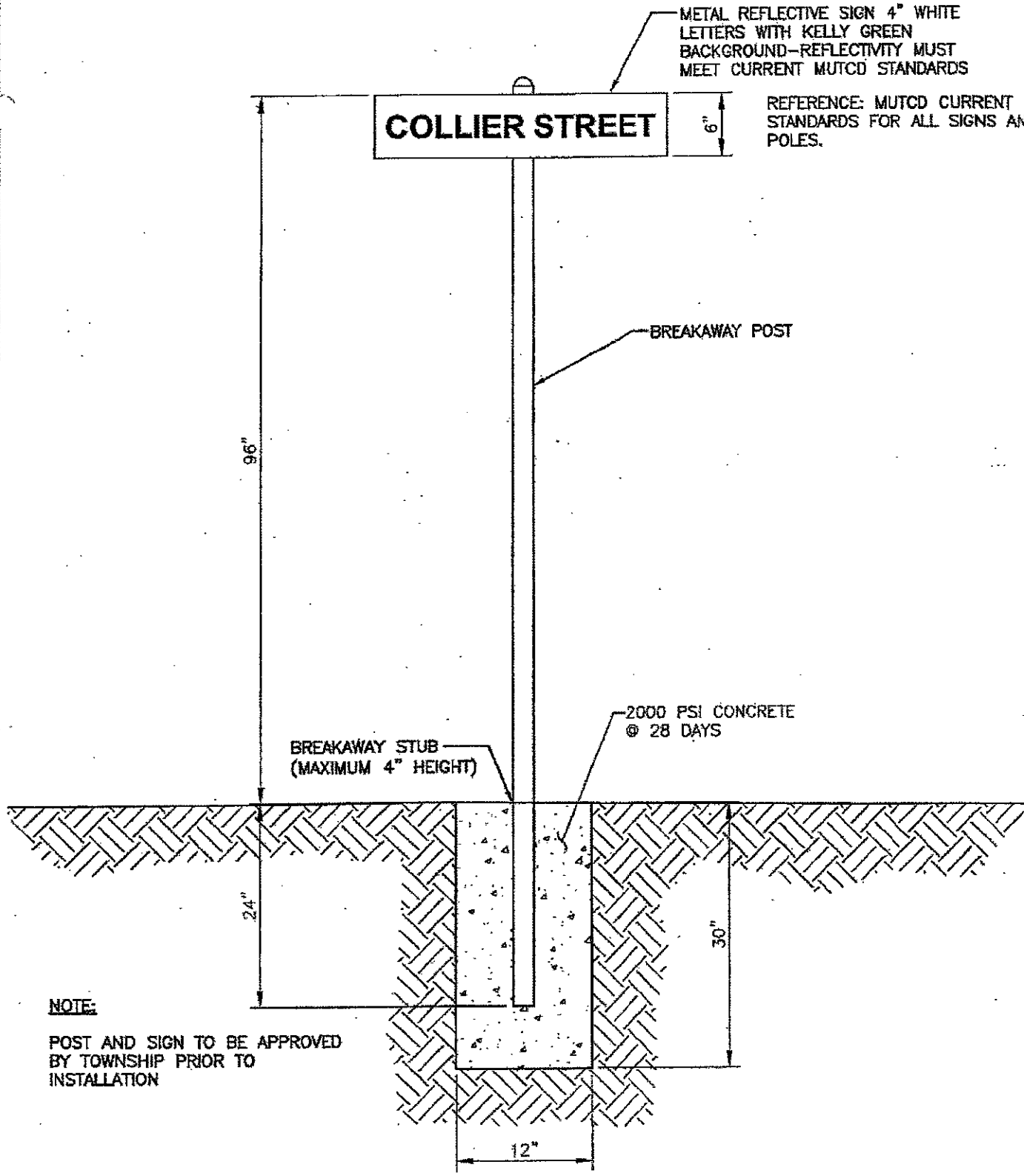

NOTE:

POST AND SIGN TO BE APPROVED BY TOWNSHIP PRIOR TO INSTALLATION

Scale:	N.T.S.		
Drwn By:	Chkd By:	Appd By:	
Filename:	Collierdet–1.dwg		
Date:	December 2008		

Township of Collier
Standard Details
Detail R-7
Street Sign

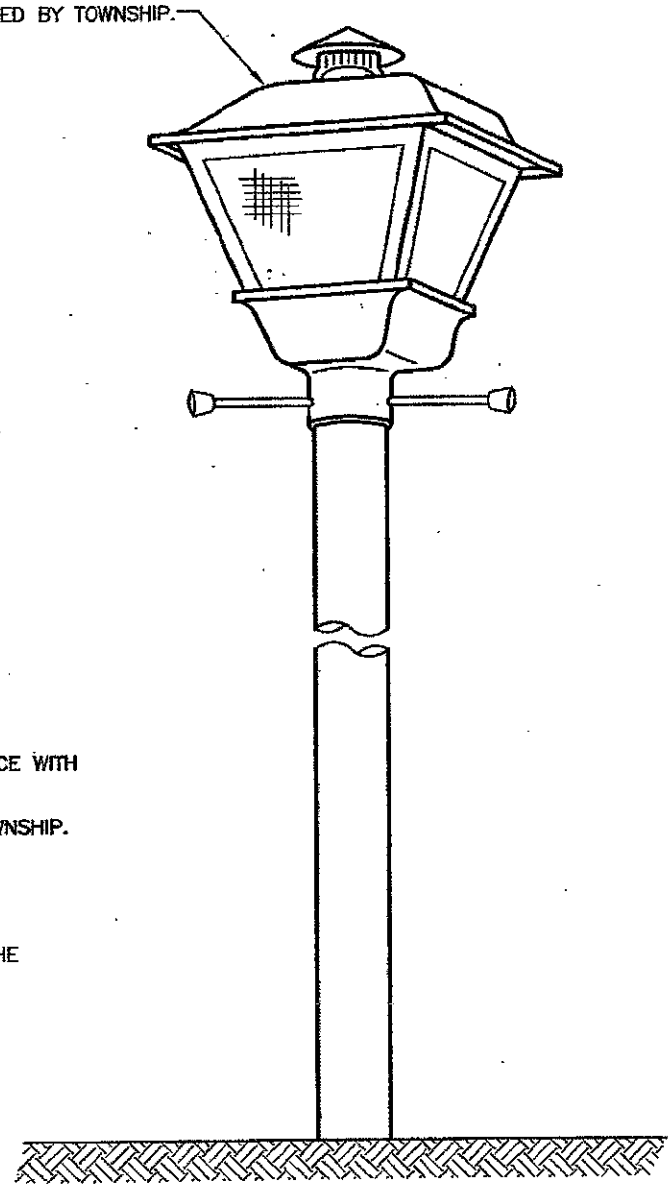

NOTES:

1. PROVIDE STREET LIGHTING AND INSTALL IN ACCORDANCE WITH DUQUESNE LIGHT REQUIREMENTS.
2. SPACING AND WATTAGE TO BE APPROVED BY THE TOWNSHIP.
3. STYLE TO BE APPROVED BY TOWNSHIP.
4. HIGH PRESSURE SODIUM ONLY.
5. OPTIONAL LIGHT STANDARDS MAY BE APPROVED BY THE TOWNSHIP WITH MAINTENANCE OF THE LIGHT REQUIRED BY DUQUESNE LIGHT COMPANY OR OTHER APPROVED PROVIDER.
6. THE CENTER OF THE POLE MUST BE LOCATED SIX FEET INSIDE THE RIGHT OF WAY.

Scale:	N.T.S.		Township of Collier Standard Details Detail R-8 Street Light
Drwn By:	Chkd By:	Appd By:	
Filename:	Collierdet-1.dwg		
Date:	December 2008		

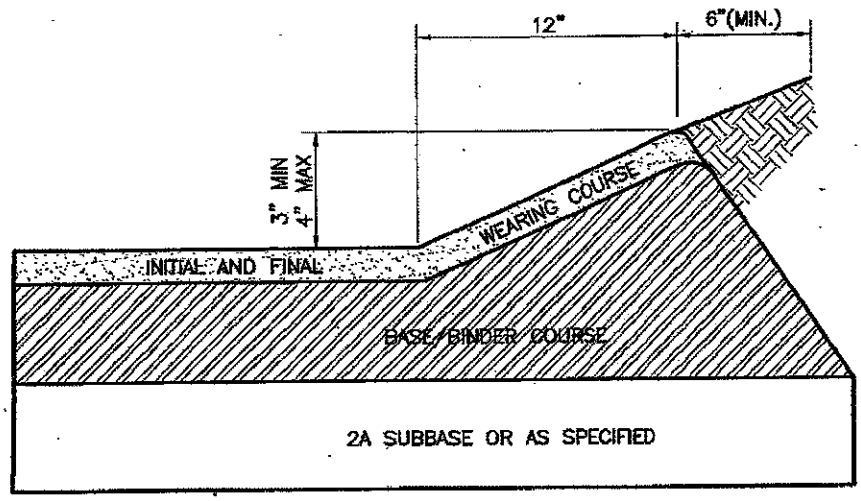

Scale: N.T.S.		Township of Collier Standard Details Detail R-9 Typical Bituminous Concrete Wedge Curb
Drwn By:	Chkd By:	Appd By:
Filename: Collierdet-1.dwg		
Date: December 2008		

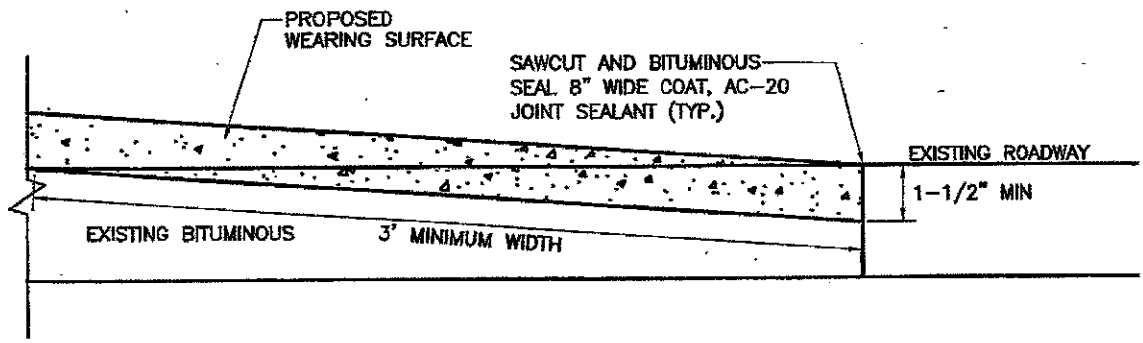

Scale: N.T.S.		Township of Collier Standard Details
Drwn By:	Chkd By:	Appd By:
Filename: Collierdet-1.dwg		Detail R-10 Typical Bituminous Concrete Keyway
Date: December 2008		

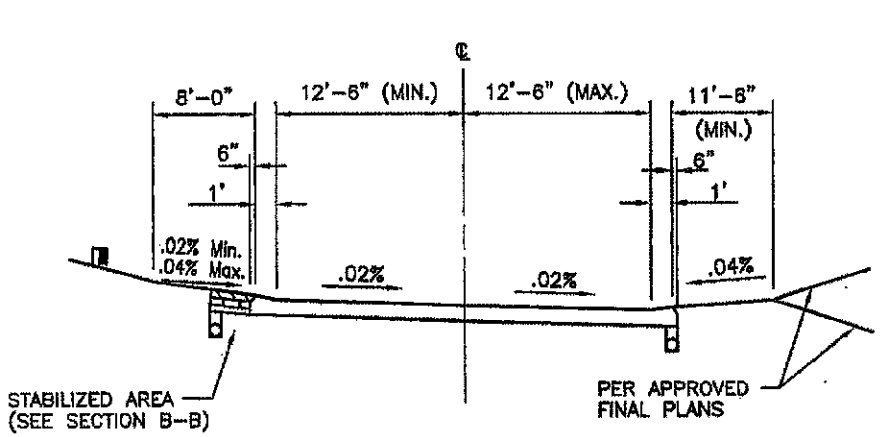

SECTION A-A

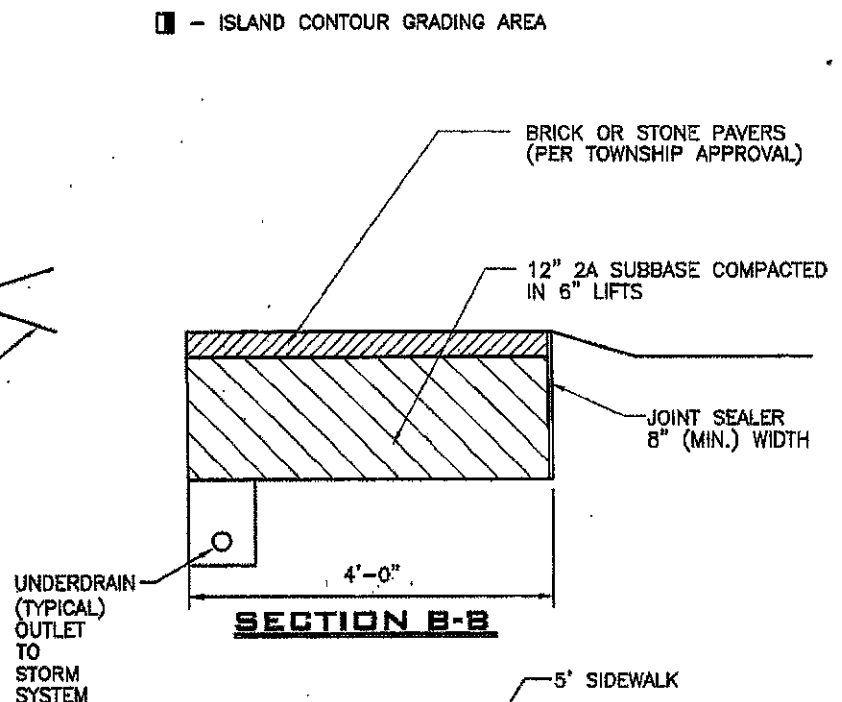

SECTION B-B

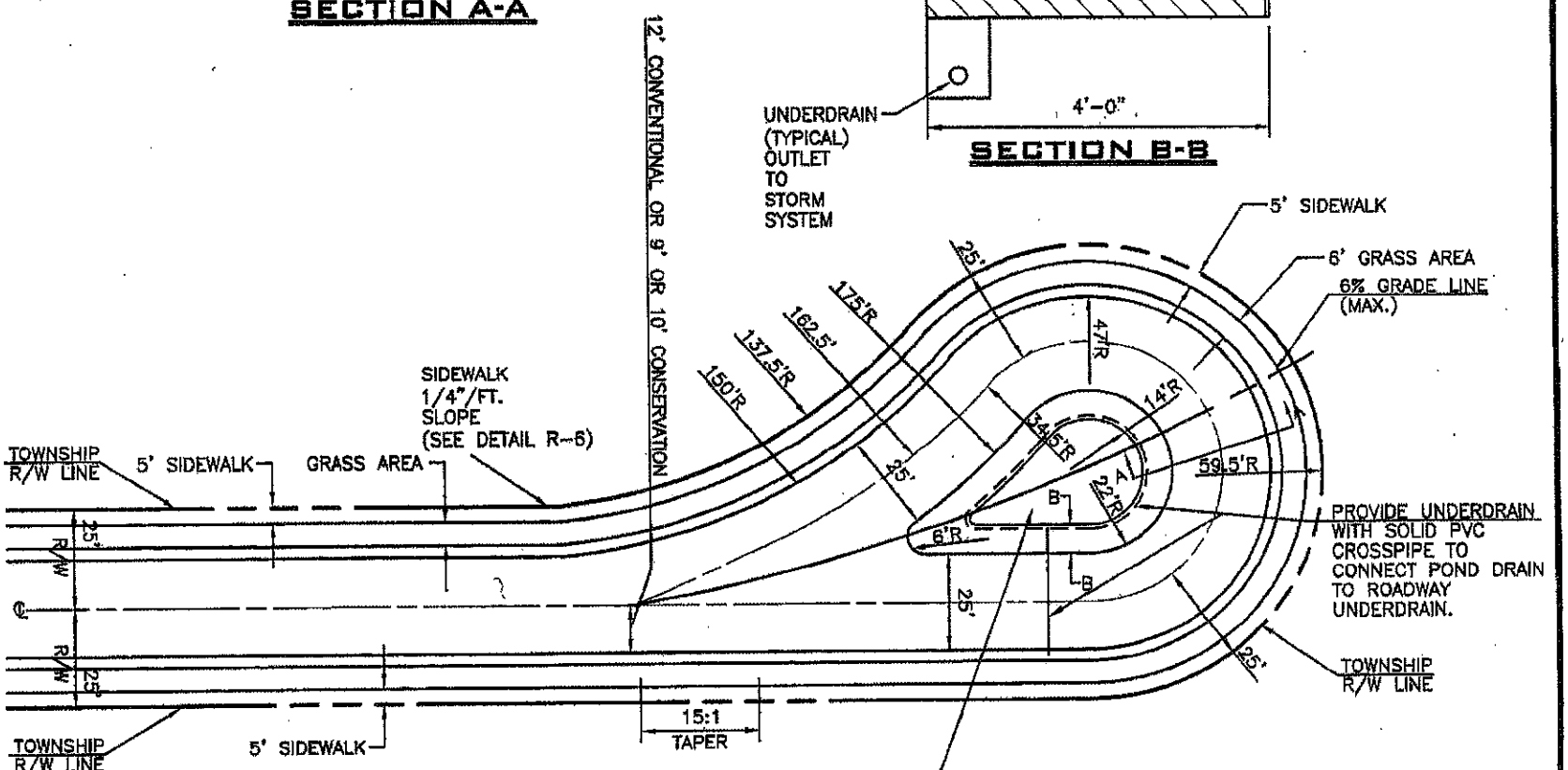

CUL-DE-SAC WITH ISLAND

Scale: N.T.S.
Drawn By:
Chkd By:
Appd By:
Filename: Colliercdet-1.dwg
Date: December 2008

Township of Collier
Standard Details
Detail R-11
Cul-De-Sac with Island

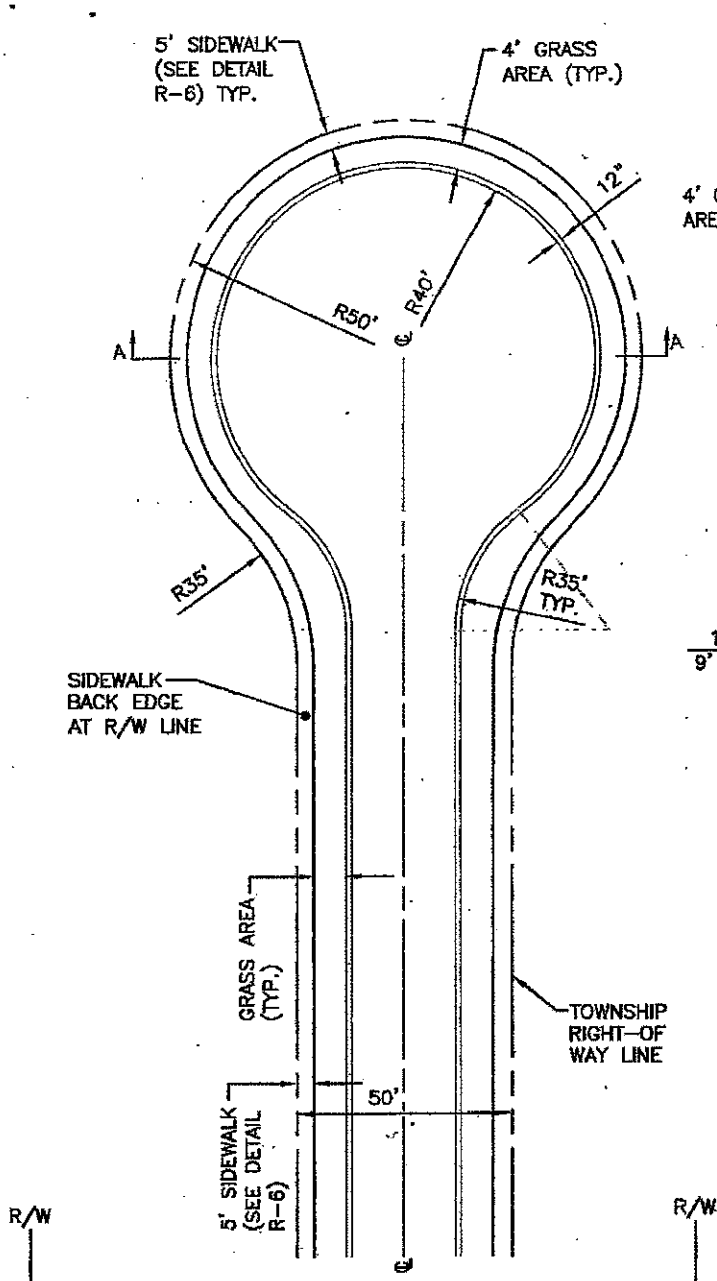

TYPICAL CUL-DE-SAC

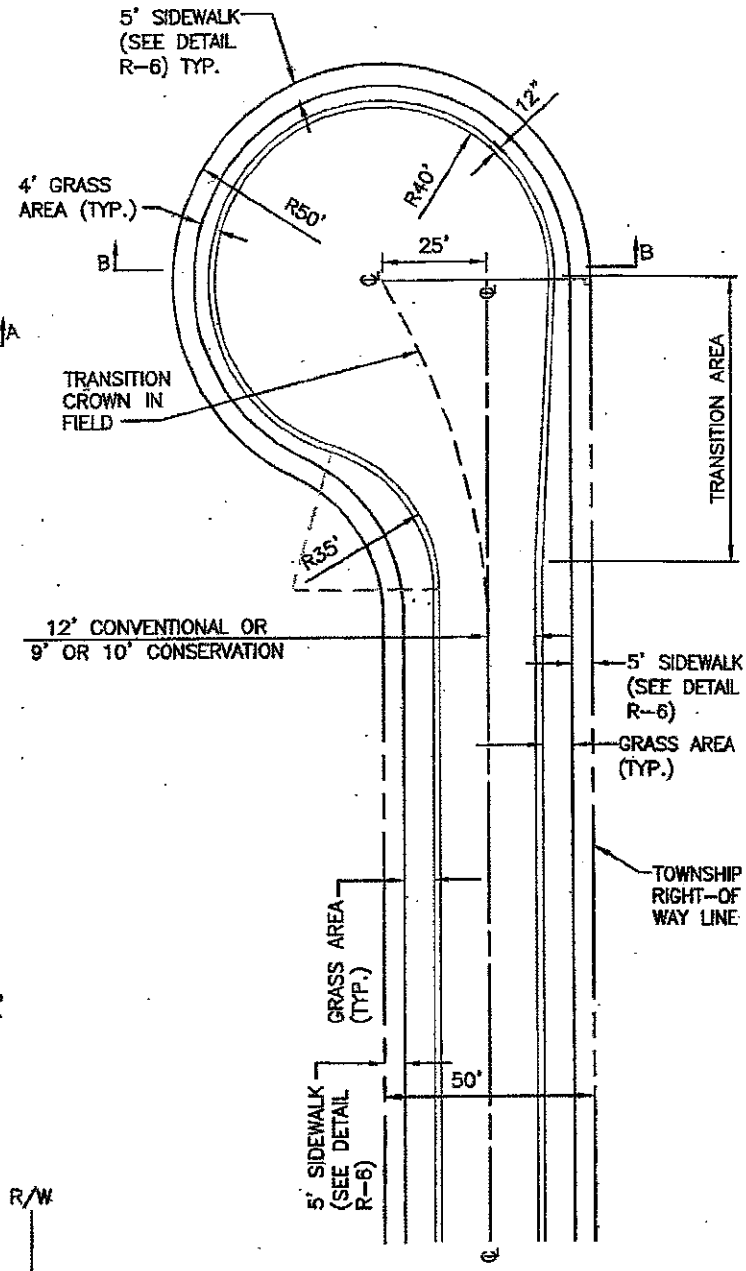

OFFSET CUL-DE-SAC

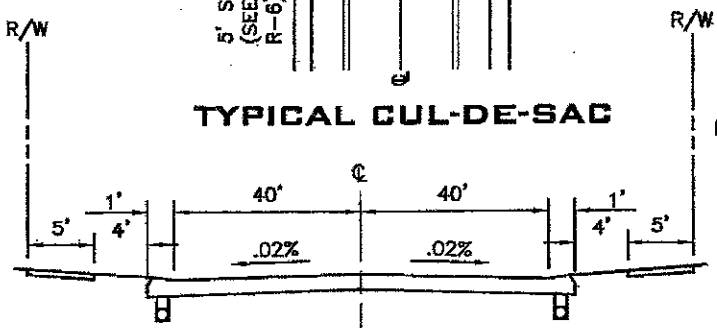

SECTION A-A

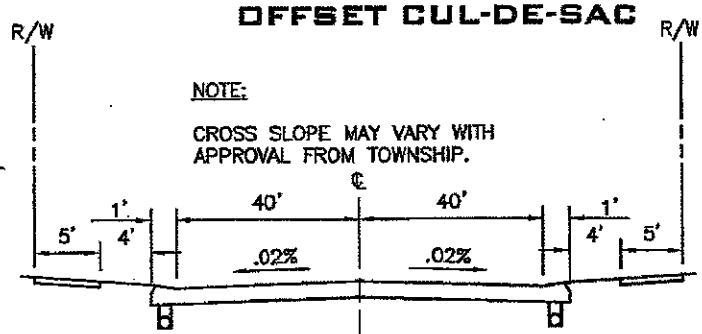

NOTE:

CROSS SLOPE MAY VARY WITH APPROVAL FROM TOWNSHIP.

SECTION B-B

Scale: N.T.S.		Township of Collier Standard Details
Drwn By:	Chkd By:	Appd By:
Filename: Collierdet-1.dwg		Detail R-12 Cul-De-Sac without Island
Date: December 2008		

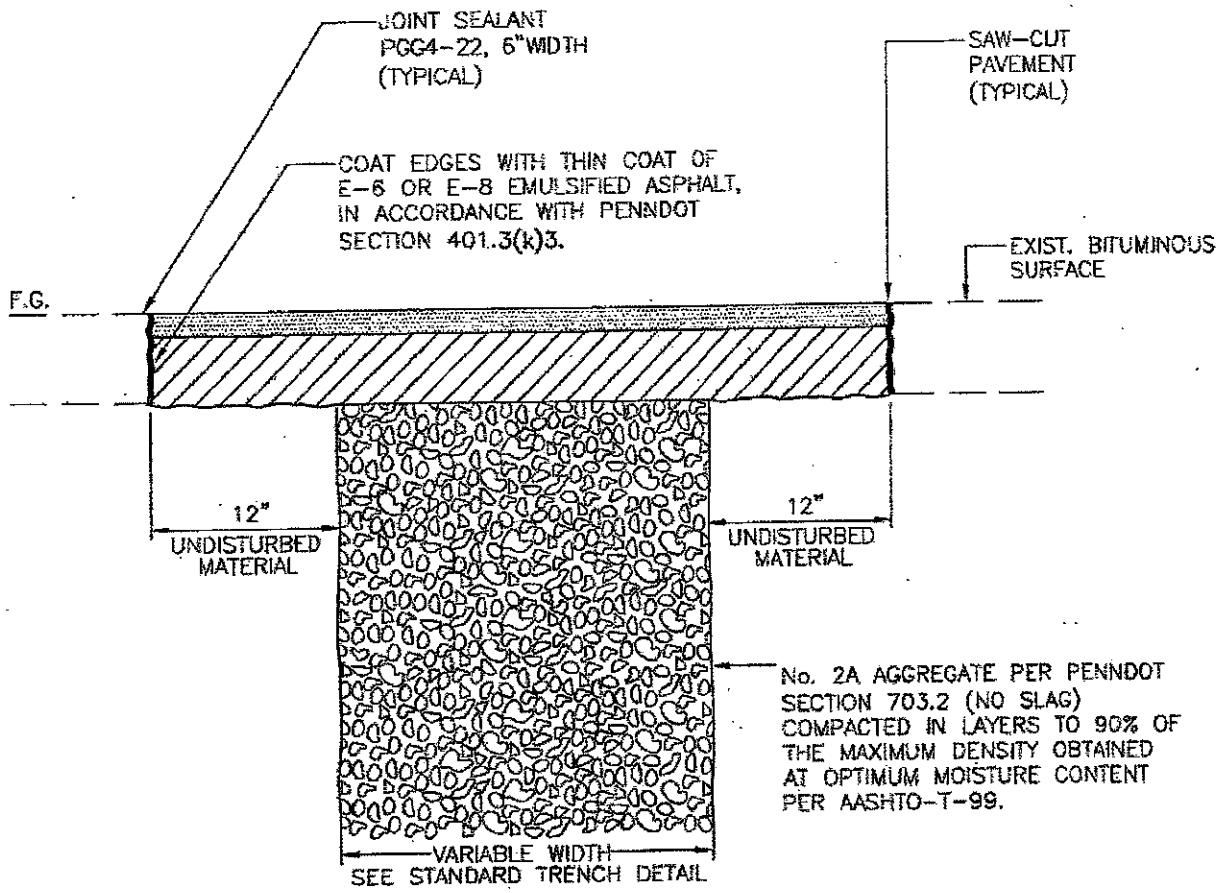

NOTE:

1. ALL BACKFILL SHALL BE COMPACTED IN 6" MAXIMUM LAYERS, MECHANICALLY TAMPED TO 95% MAXIMUM DENSITY.
2. TEMPORARY BITUMINOUS COLD PATCH SHALL BE USED IN ALL AREAS WHERE EXISTING FLEXIBLE-BASE PAVEMENT HAS BEEN REMOVED.
3. FOR TRANSVERSE OPENINGS CONSTRUCT PAVING JOINTS AT 6:1 SKEW TO ROADWAY.
4. ALL PAVEMENT REPLACEMENT THICKNESSES INDICATED ARE MINIMUMS. WHERE THE EXISTING PAVEMENT EXCEEDS THE MINIMUM THICKNESSES INDICATED, THE PAVEMENT SHALL BE REPLACED BY MATCHING THE EXISTING PAVEMENT THICKNESS.

1-1/2" SUPERPAVE HMA BITUMINOUS WEARING COURSE 9.5mm, SRL-H, PennDOT SECT. 409.

4-1/2" SUPERPAVE HMA BASE COURSE, 25mm, PennDOT SECT. 409.

No. 2A AGGREGATE PER PENNDOT SECTION 703.2 (NO SLAG).

Scale: N.T.S.		
Drwn By:	Chkd By:	Appd By:
Filename: Collierdet-1.dwg		
Date: December 2008		

Township of Collier
Standard Details
Detail R-13
Bituminous Driveway and Berm Restoration

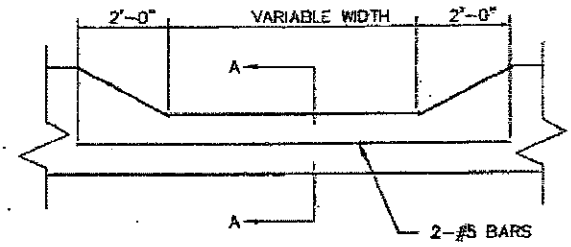

PLAN VIEW

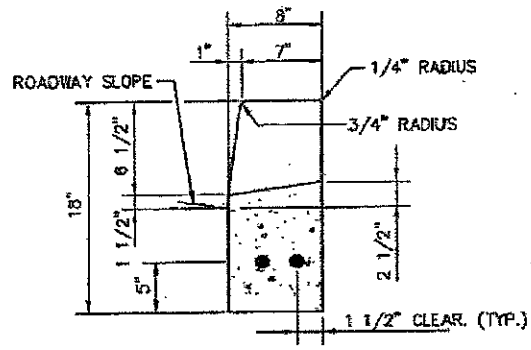

SECTION A-A

DEPRESSED CURB FOR DRIVEWAYS

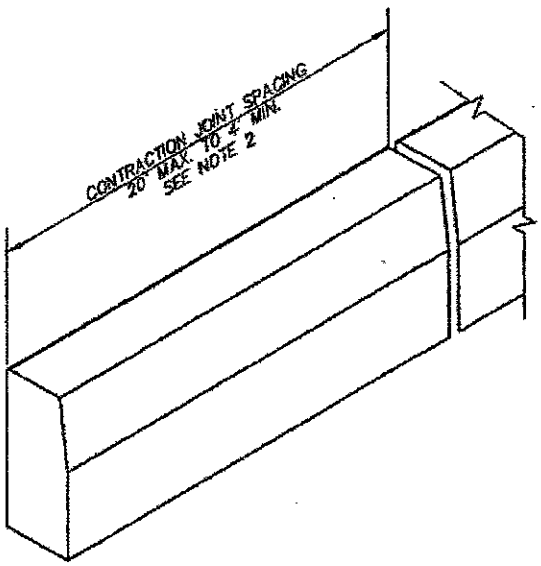

PLAIN CONCRETE CURB

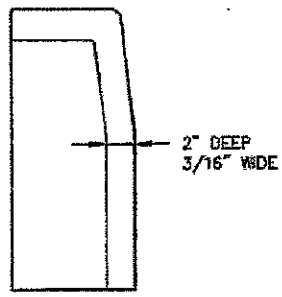

DETAIL A
CONTRACTION JOINT

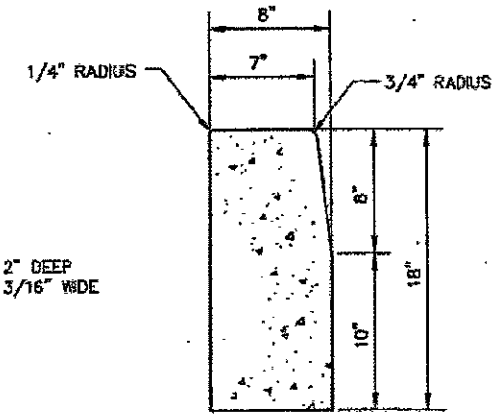

TYPICAL
CROSS SECTION

NOTES:

1. PROVIDE MATERIALS AND CONSTRUCTION MEETING REQUIREMENTS OF PUBLICATION 408, SECTION 630 FOR PLAIN CONCRETE CURB AND DEPRESSED CURB.
2. SPACE CONTRACTION JOINTS IN UNIFORM LENGTHS OR SECTIONS.
3. PLACE 3/4-INCH PREMOLDED EXPANSION JOINT FILLER MATERIAL AT STRUCTURES AND AT THE END OF THE WARK DAY. CUT MATERIAL TO CONFORM TO AREA ADJACENT TO CURB OR TO CONFROM TO CROSS SECTIONAL AREA OF CURB.
4. ONLY 18" FULL DEPTH CONCRETE CURB IS PERMITTED

Scale: N.T.S.		Township of Collier Standard Details
Drwn By:	Chkd By:	Appd By:
Filename: Collierdet-1.dwg		Detail R-14 Standard Concrete Curb
Date: December 2008		

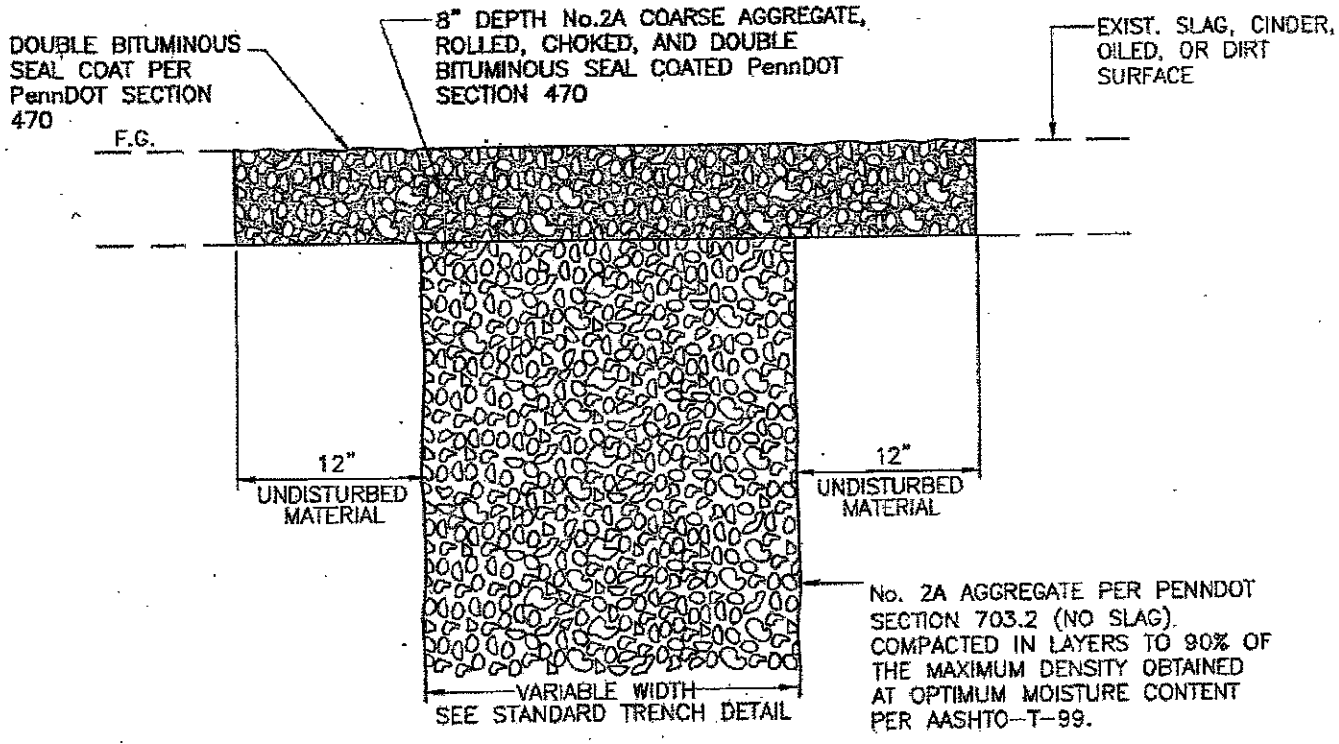

NOTE:

1. ALL BACKFILL SHALL BE COMPACTED IN 6" MAXIMUM LAYERS, MECHANICALLY TAMPED TO 95% MAXIMUM DENSITY.

No. 2A COARSE AGGREGATE PENNDOT SECTION 703.2 (NO SLAG)

No. 2A AGGREGATE PER PENNDOT SECTION 703.2 (NO SLAG).

Scale: N.T.S.		Township of Collier Standard Details
Drwn By:	Chkd By:	Appd By:
Filename: Collierdet-1.dwg		Detail R-15 Surface Treatment for Unpaved Roads and Shoulders
Date: December 2008		

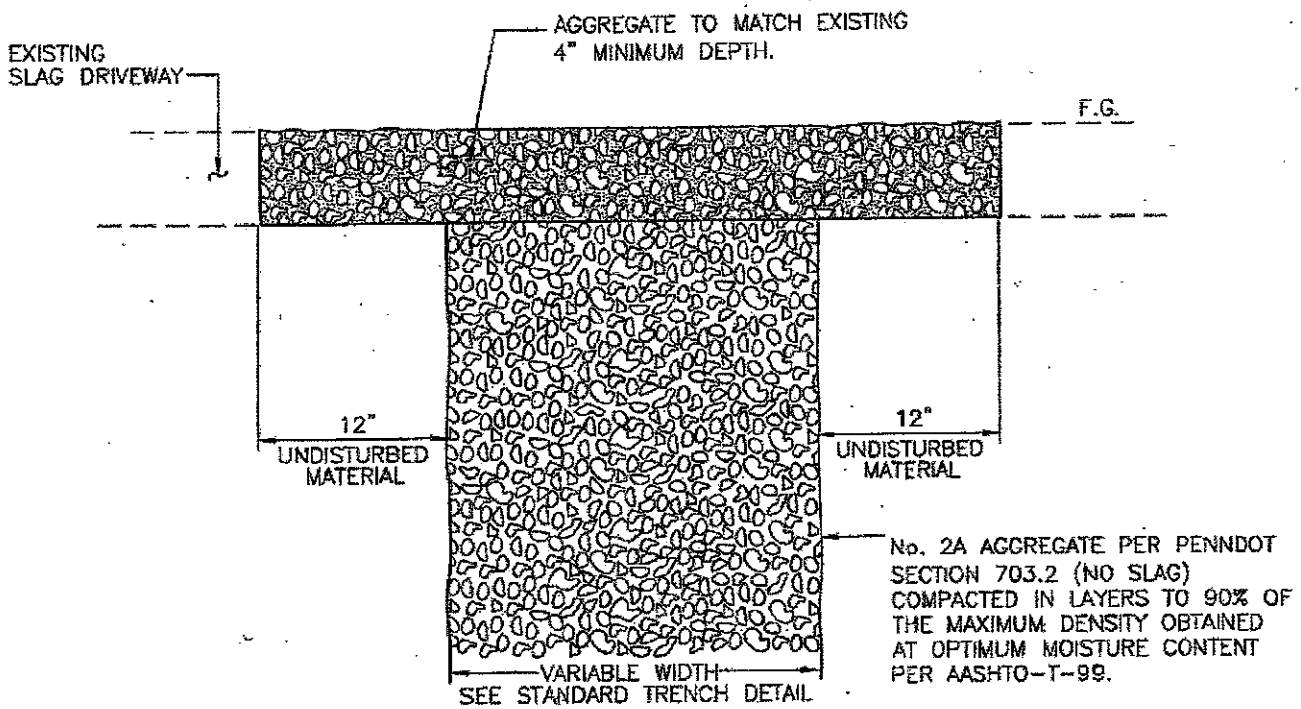

SURFACE AGGREGATE TO MATCH EXISTING AGGREGATE AT MINIMUM 4" DEPTH OR MATCH DEPTH OF EXISTING

No. 2A AGGREGATE PER PENNDOT SECTION 703.2 (NO SLAG).

Scale: N.T.S.		Township of Collier Standard Details
Drwn By:	Chkd By:	Appd By:
Filename: Collierdet-1.dwg		Detail R-16 Aggrgate Driveway Restoration
Date: December 2008		

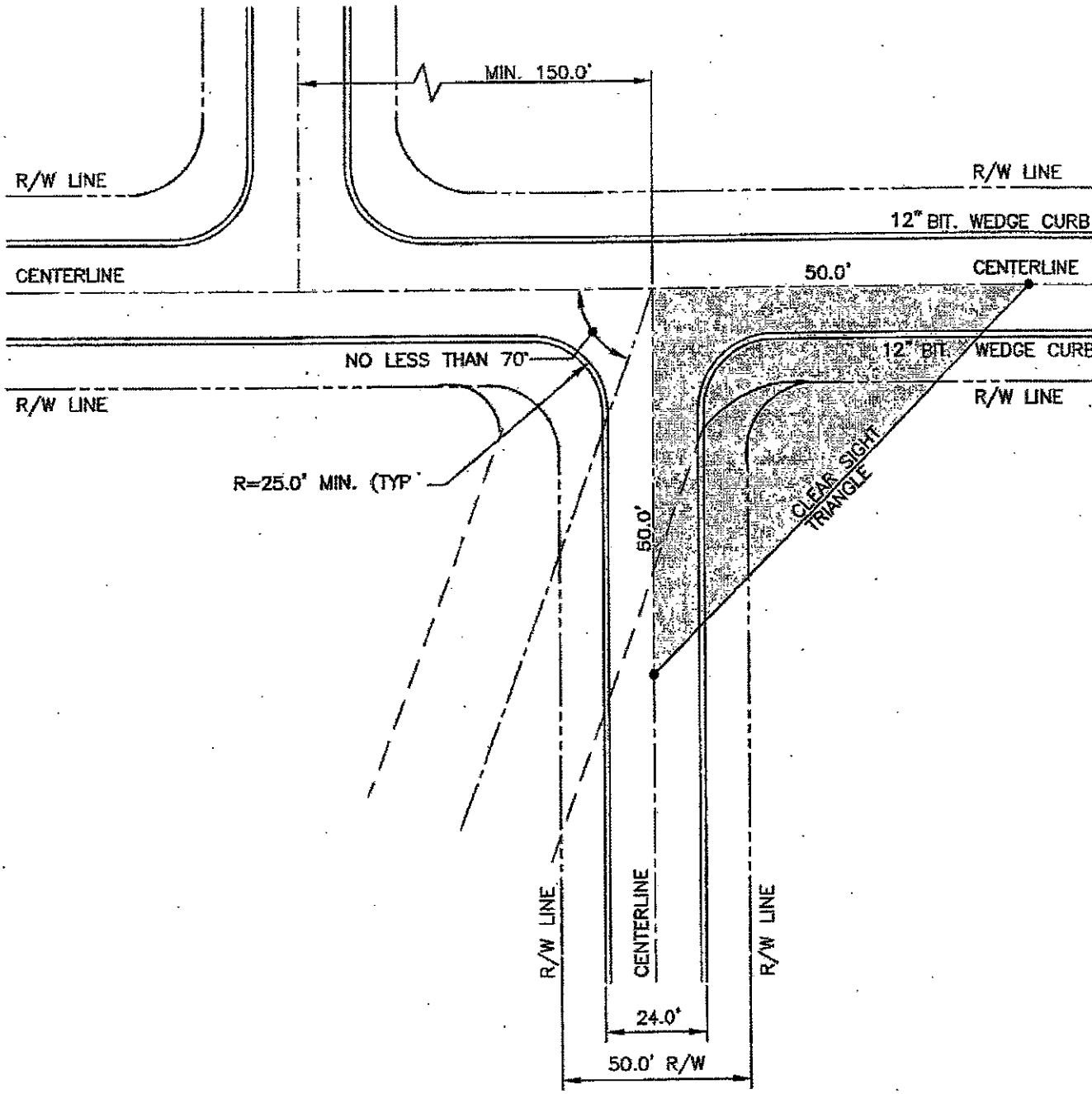

PLAN – TYPICAL INTERSECTION DESIGN

SCALE: 1"=40'

Scale: N.T.S.		Township of Collier Standard Details
Drwn By:	Chkd By:	Appd By:	Detail R-17 Typical Intersection Design
Filename: Collierdet-1.dwg		
Date: December 2008		

LOCAL ROAD/STREET

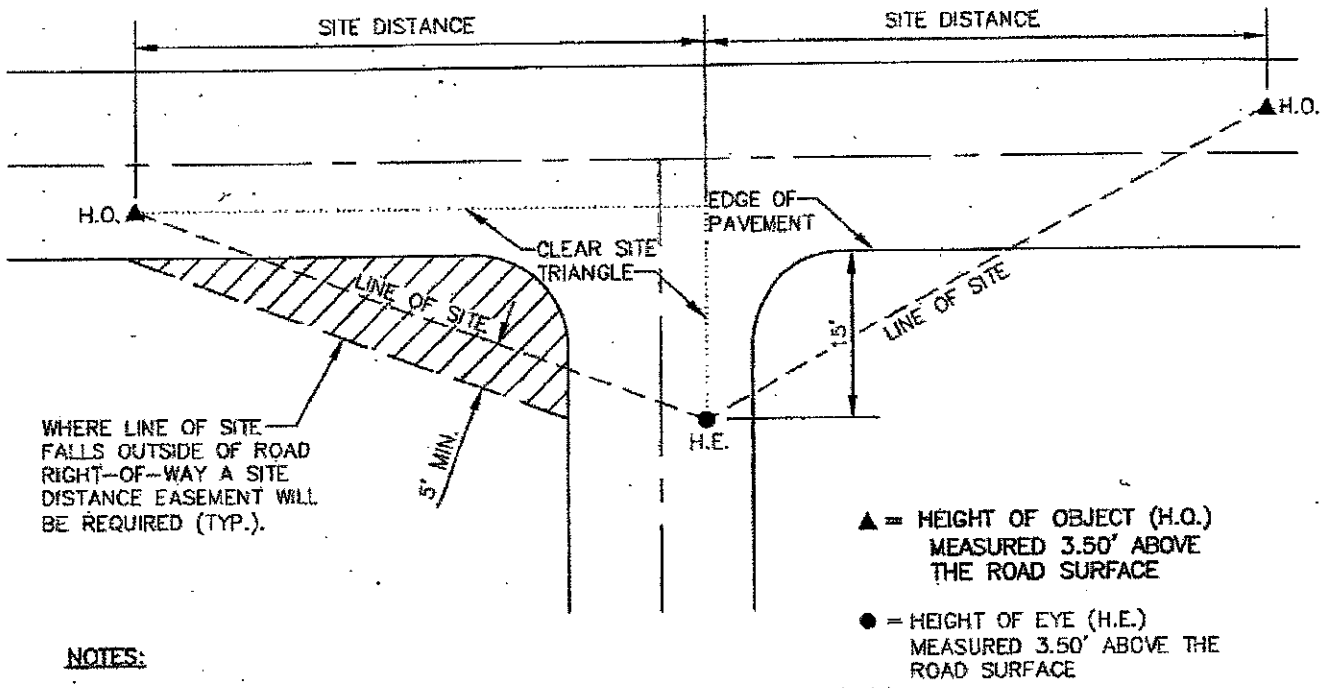

NOTES:

1. NO OBSTRUCTIONS TO THE LINE OF SIGHT INDICATED, AS MEASURED BETWEEN A POINT 3.50' ABOVE THE ROAD SURFACE AT THE INTERSECTION AND 4.35' MEASURED ON THE EXISTING ROADWAY, SHALL BE PERMITTED WITHIN THE CLEAR SIGHT TRIANGLE.
2. FOR MEDIAN WIDTHS GREATER THAN 60 FEET, EACH ROADWAY CAN BE CONSIDERED AS A SEPARATE TWO, THREE, OR FOUR LANE ROADWAY.
3. ALL SIGHT DISTANCE REQUIREMENTS ARE BASED UPON A DESIGN SPEED AND NOT POSTED SPEED. IN PRESENTING SIGHT DISTANCE DIAGRAMS FOR EXISTING ROADWAYS WHERE THE POSTED SPEED IS PROVIDED, ADD 5MPH TO OBTAIN THE DESIGN SPEED.
4. DESIGN SHALL CONFORM TO PennDOT'S DESIGN MANUAL PART 2, AND BE SEALED BY THE DEVELOPER'S TRAFFIC ENGINEER.

Scale: N.T.S.		Township of Collier Standard Details
Drwn By:	Chkd By:	Appd By:
Filename: Collierdet-1.dwg		Detail R-18
Date: December 2008		Local Road and Street Intersection Site Distance Requirement

NOTE: (1) ALL OFF-STREET PARKING AREAS OF MORE THAN FIVE (5) VEHICLES AND (2) ACCESS DRIVES LEADING TO THE PARKING AREA WHICH ARE ACCESSIBLE TO THE GENERAL PUBLIC SHALL BE GRADED FOR PROPER DRAINAGE AND PAVED WITH CONCRETE, BITUMINOUS CONCRETE OR BITUMINOUS SEAL COAT.

(2) HANDICAPPED PARKING SPACES SHALL BE PROVIDED FOR PARKING AREAS PER CURRENT ADA REQUIREMENTS.

(3) ALL PARKING SPACES SHALL BE A MINIMUM OF 180 S.F.

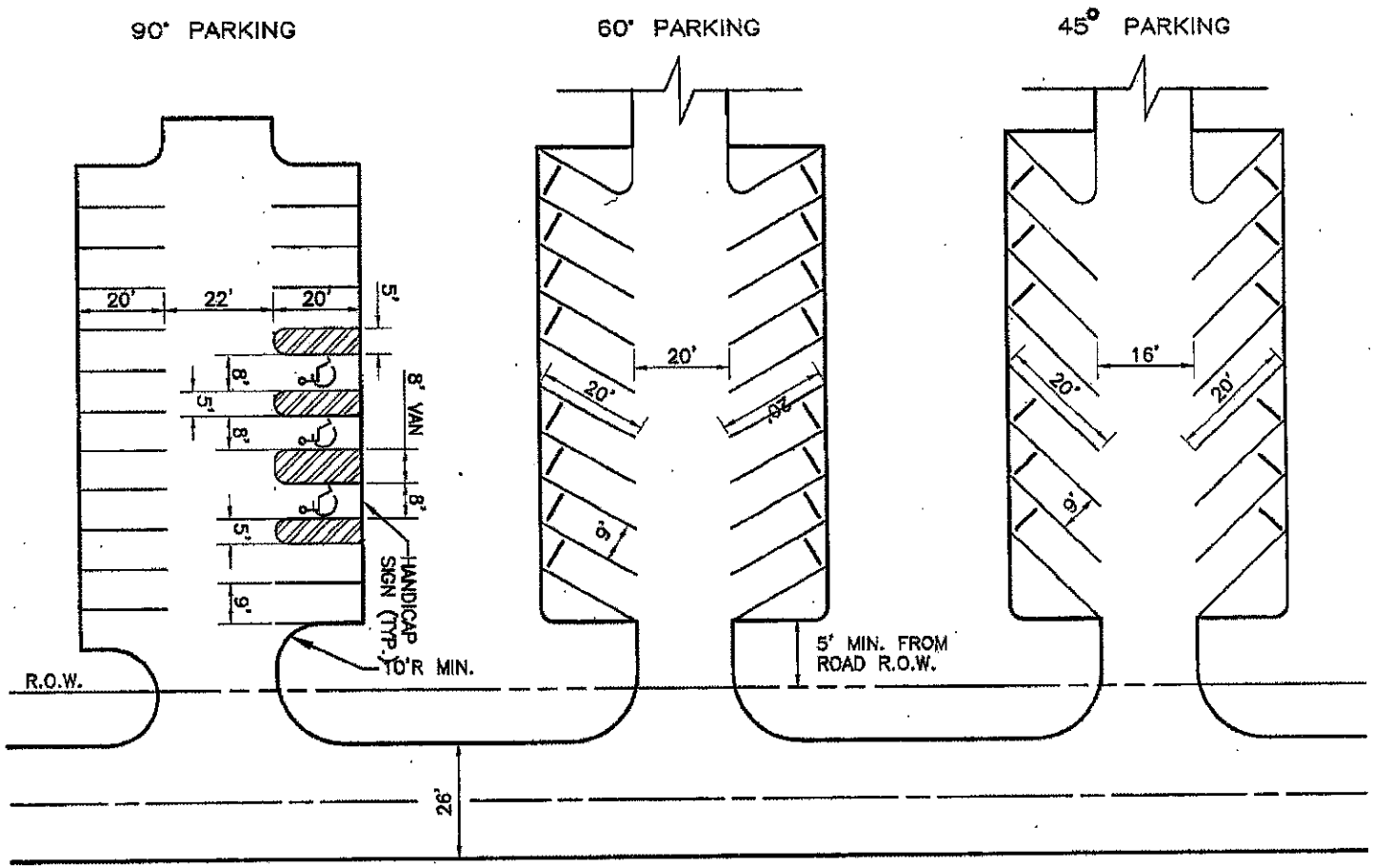

Scale: N.T.S.

Drwn By: Chkd By: Appd By:

Filename: Collierdet-1.dwg

Date: December 2008

Township of Collier
Standard Details
Detail S-1
Parking Configurations

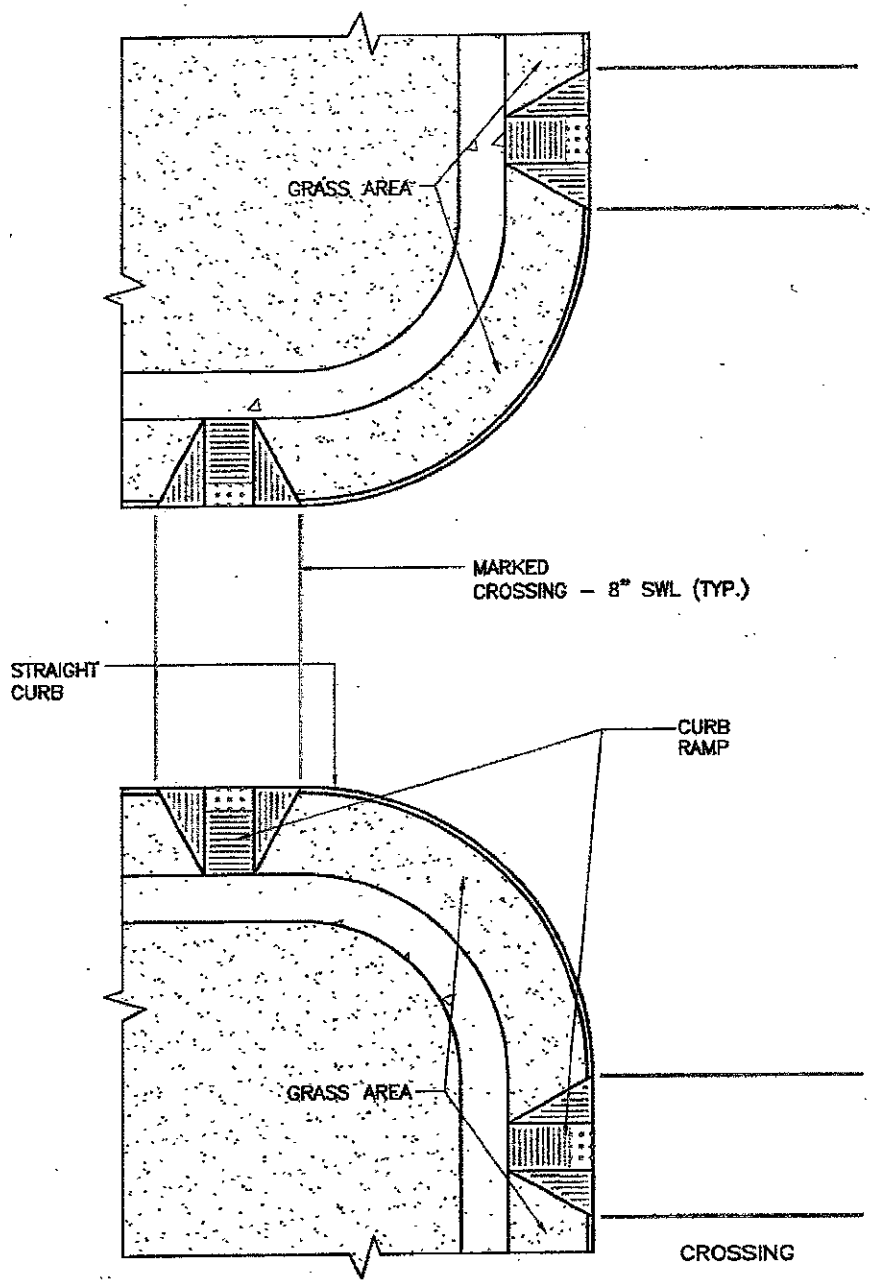

NOTE:

ALL ADA ACCESSIBLE RAMPS MUST COMPLY WITH CURRENT PennDOT RC–STANDARDS.

REFERENCES:

1. FEDERAL REGISTER, ACT NO. 235.
2. THE ARCHITECTURAL BARRIERS ACT (PUBLIC LAW 90–480) AND ALL REQUIREMENTS LISTED BY THE AMERICANS WITH DISABILITIES ACT (ADA).

Scale:		N.T.S.	Township of Collier Standard Details
Drwn By:	Chkd By:	Appd By:	Detail S-2 ADA Ramps
Filename:	Collierdet–1.dwg		
Date:	December 2008		

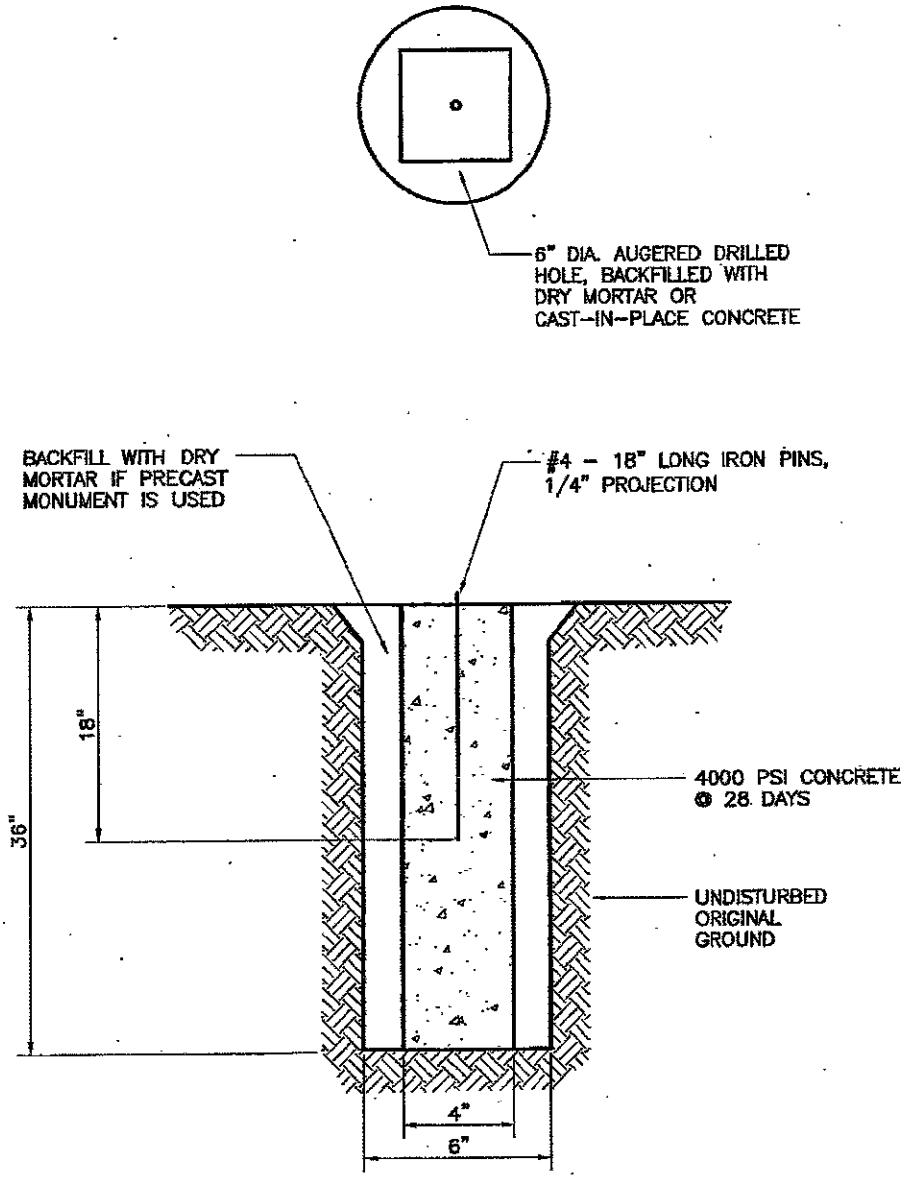

NOTE:

LOCATE MONUMENT PER RECORDED PLAN (AS APPROVED BY TWP.), 5'-6" OFF P/L WITHIN PUBLIC DEDICATED ROADWAY, INSTALL AFTER SIDEWALK AND OTHER GRADING IS COMPLETE

Scale: N.T.S.		Township of Collier Standard Details
Drwn By:	Chkd By: / Appd By:	Detail S-3
Filename: Collierdet-1.dwg		Concrete Monument
Date: December 2008		

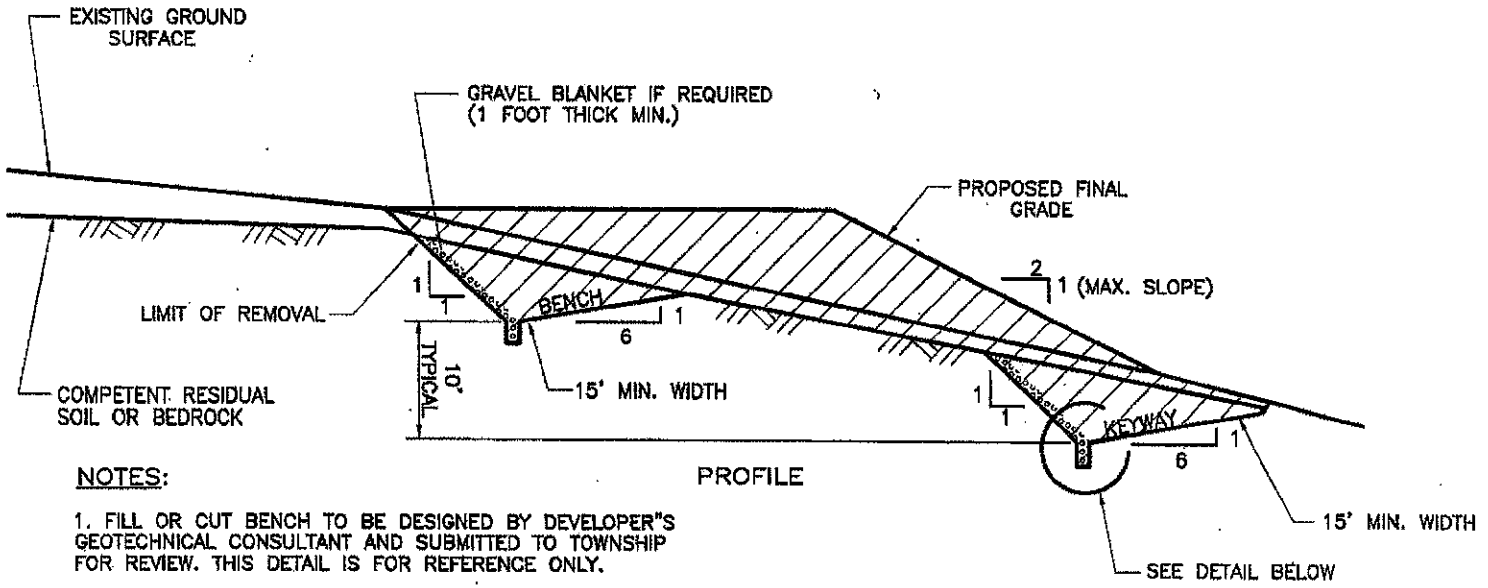

PROFILE

NOTES:

1. FILL OR CUT BENCH TO BE DESIGNED BY DEVELOPER'S GEOTECHNICAL CONSULTANT AND SUBMITTED TO TOWNSHIP FOR REVIEW. THIS DETAIL IS FOR REFERENCE ONLY.

2. GRAVEL BLANKET TO BE INSTALLED AS DIRECTED BY DEVELOPER'S GEOTECHNICAL CONSULTANT.

3. 4" PERF. PLASTIC PIPE TO DRAIN TO OUTSLOPE AND THE WATER DIVERTED OR COLLECTED IF NECESSARY TO PREVENT DOWNSTREAM DAMAGE.

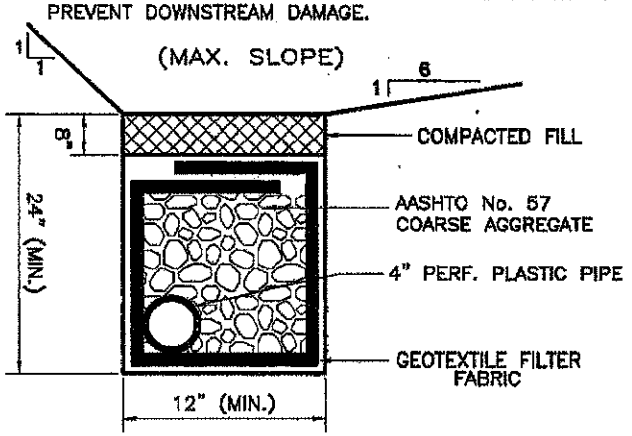

(IF GRAVEL BLANKET IS NOT REQUIRED)

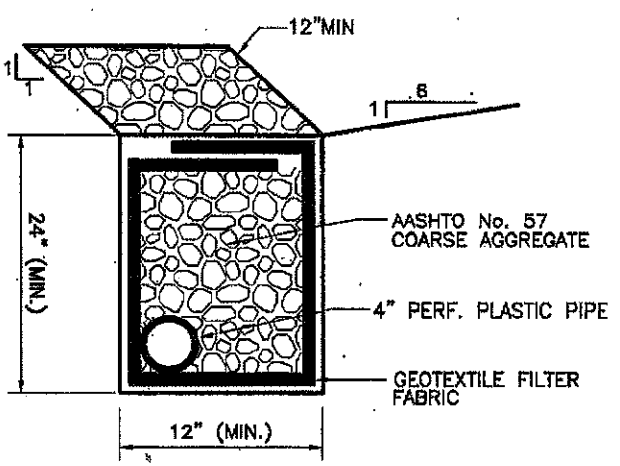

(IF GRAVEL BLANKET IS REQUIRED)

Township of Collier
Standard Details
Detail S-4
Bench Drain

Scale:	N.T.S.
Drwn By:	
Chkd By:	
Appd By:	
Filename:	Collierdet-1.dwg
Date:	December 2008

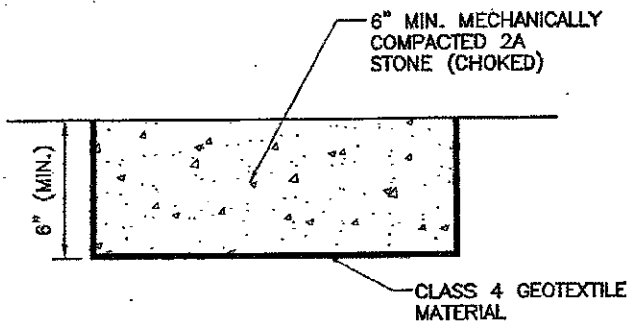

GRAVEL TRAIL SECTION

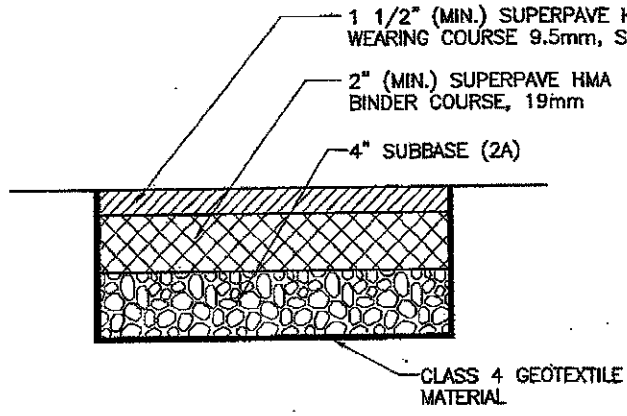

BITUMINOUS CONCRETE TRAIL SECTION

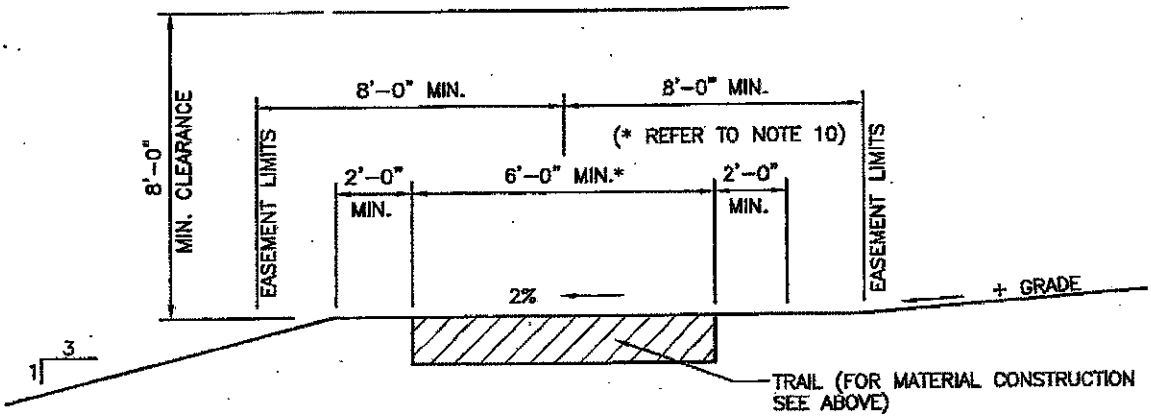

GENERAL DESIGN SPECIFICATIONS:

1. TRAIL WIDTH: 6' (MIN.).
2. TRAIL EASEMENT WIDTH: 16' (MIN.). ℄ EASEMENT TO FOLLOW ℄ TRAIL.
3. TRAIL MARKERS PROVIDED EVERY 600' (MAX.). (OR AT LOCATIONS DESIGNATED BY TWP.)
4. TRAIL SIGHT DISTANCE: 50' (MIN.) EACH DIRECTION.
5. TRAIL MUST BE CONSTRUCTED WITH SMOOTH SURFACE TO PREVENT WATER FROM PONDING AND ICE FORMATION.
6. PRESERVE NATURAL GROUND COVER ADJACENT TO TRAIL TO LIMIT SOIL EROSION. TRAIL CONSTRUCTION MUST CONFORM TO CURRENT PADEP AND ACCD STANDARDS FOR EROSION CONTROL.
7. TRAILS AND TRAIL EASEMENTS MUST MATCH TO TRAILS AND TRAIL EASEMENTS ON ADJOINING PROPERTIES.
8. TRAIL GRADES:

0–5%	DESIRED	
5–6%	FOR 800	LF (MAX.)
6–7%	FOR 400	LF (MAX.)
7–8%	FOR 300	LF (MAX.)
8–9%	FOR 200	LF (MAX.)
9–10%	FOR 100	LF (MAX.)
10–15%	FOR 50	LF (MAX.)
> 15%	NOT ACCEPTABLE	

CONTINUOUS LENGTH WITHOUT AND INTERMEDIATE LANDING (MIN. 5-FEET LONG AND 5-FEET WIDE)

9. PROVIDE EXECUTED AND RECORDED EASEMENT FOR TRAIL TO TOWNSHIP.
10. THE TRAIL WIDTH SHALL BE INCREASED AS NECESSARY, BASED UPON PEDESTRIAN TRAFFIC VOLUMES AS DETERMINED BY THE TOWNSHIP.

Scale: N.T.S.		Township of Collier Standard Details
Drwn By:	Chkd By: / Appd By:	Detail S-5
Filename: Collierdet-1.dwg		Multi-Pupose Walking and Biking Trail
Date: December 2008		

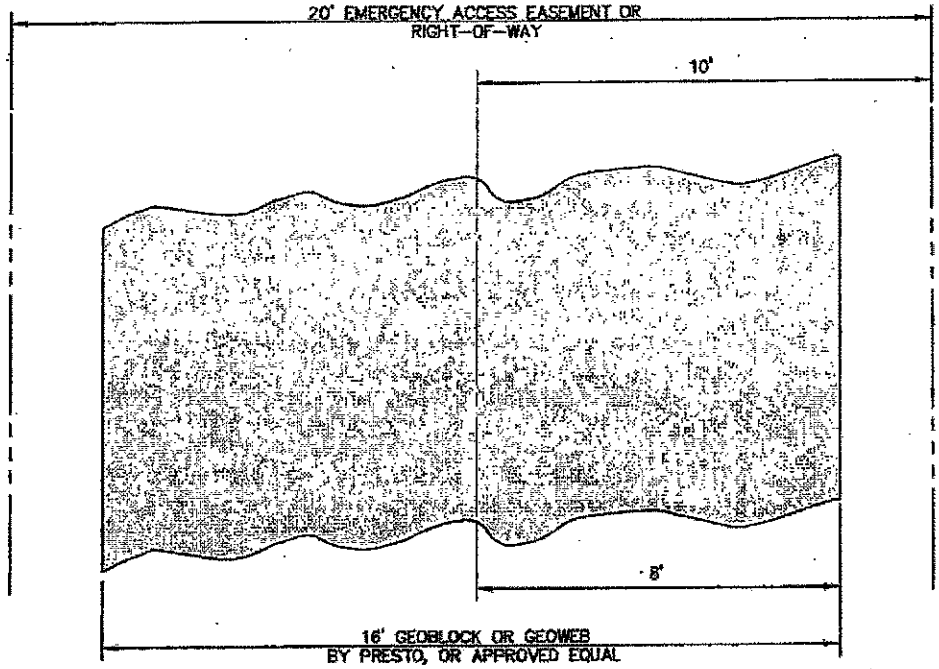

PLAN

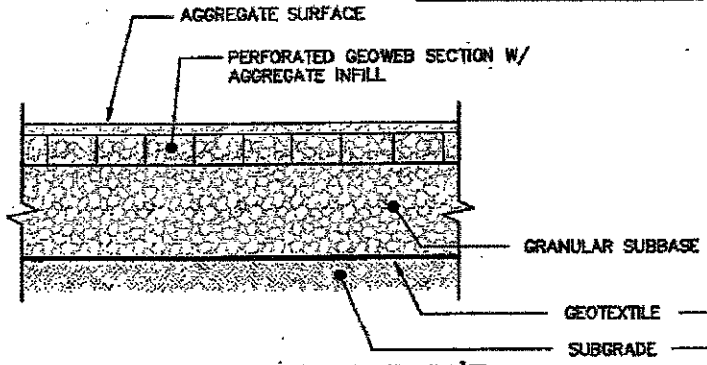

GEOWEB – GRANULAR PVM'T
TYPICAL SECTION

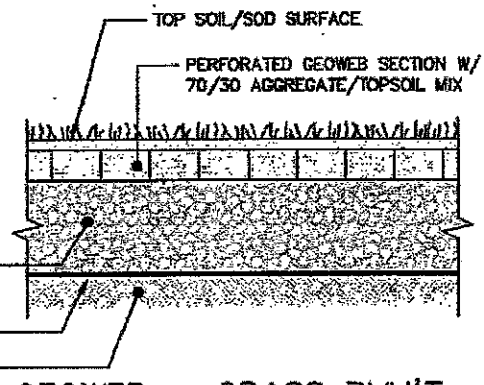

GEOWEB – GRASS PVM'T
TYPICAL SECTION

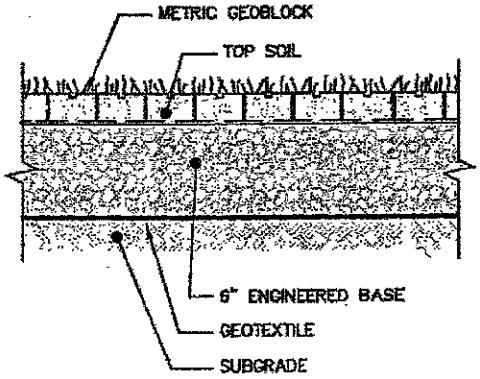

GEOBLOCK
TYPICAL SECTION

NOTE:
A RECOMMENDED "ENGINEERED BASE" CONSISTING OF COARSE SAND, CLEAR-STONE OR CRUSHED ROCK BLENDED WITH TOPSOIL WILL PROMOTE VEGETATIVE GROWTH AND PROVIDE REQUIRED STRUCTURAL SUPPORT. THE AGGREGATE PORTION SHOULD BE FREE FROM FINES AND HAVE A KNOWN PERCENTAGE VOID-SPACE WHEN COMPACTED. TOPSOIL,EQUAL TO THE VOID PERCENTAGE IN THE AGGREGATE, SHOULD BE ADDED AND BLENDED PRIOR TO PLACEMENT. IF THE TOPSOIL IS NOT PRESENT WITHIN THE ENGINEERED BASE, GRASS GROWTH MAY BE IMPAIRED.

Scale:	N.T.S.		Township of Collier Standard Details
Drwn By:	Chkd By:	Appd By:	Detail S-6
Filename:	Collierdet-1.dwg		Emergency Access Drive
Date:	December 2008		

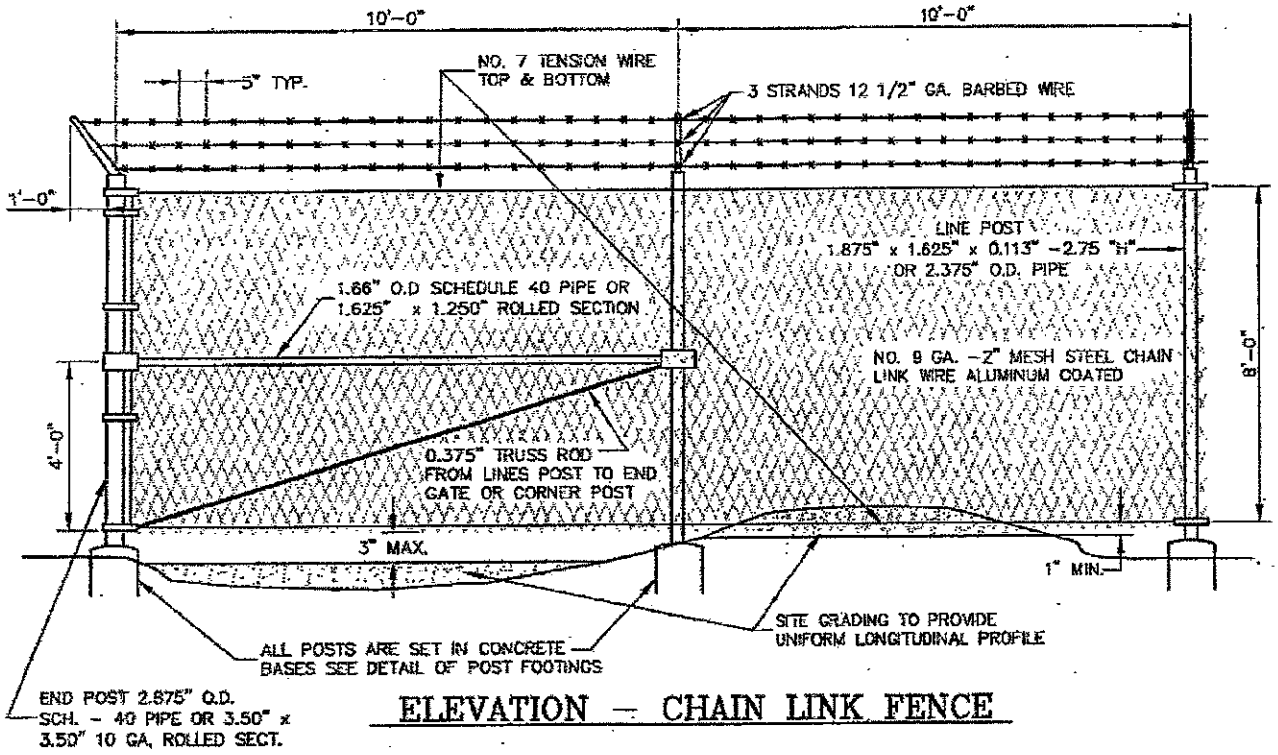

ELEVATION – CHAIN LINK FENCE

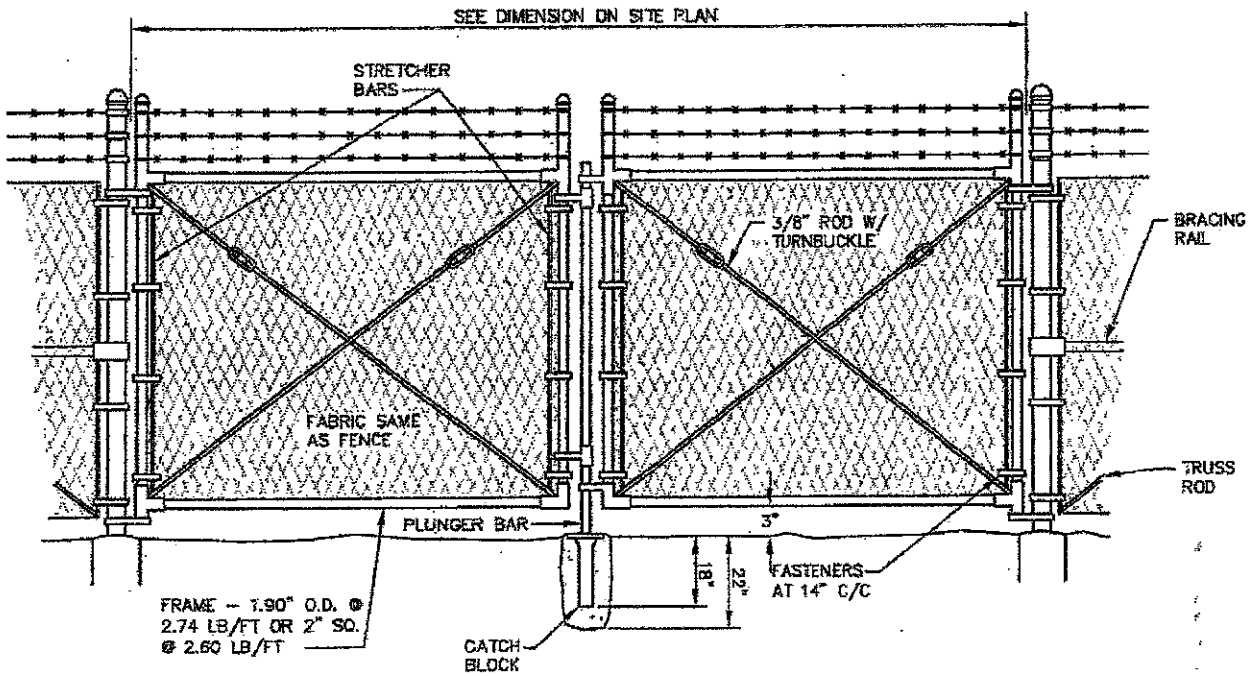

ELEVATION SHOWING VEHICULAR GATE

NOTE:
ALL MATERIALS ENTERING INTO THE CONSTRUCTION OF THIS FENCE ARE TO BE HEAVILY GALVANIZED, EXCEPT STEEL CHAIN LINK WIRE WHICH IS ALUMINUM COATED.

Scale: N.T.S.		Township of Collier Standard Details
Drwn By:	Chkd By:	Appd By:
Filename: Collierdet-1.dwg		Detail S-7
Date: December 2008		Chain Link Fence (1 of 2)

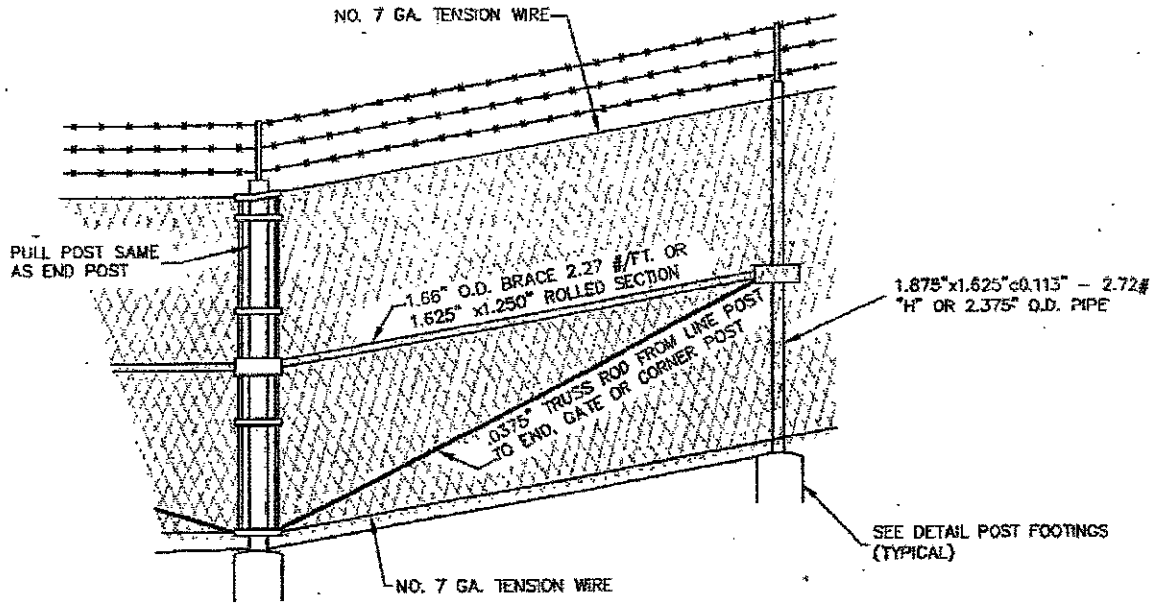

DETAIL OF PULL SECTION

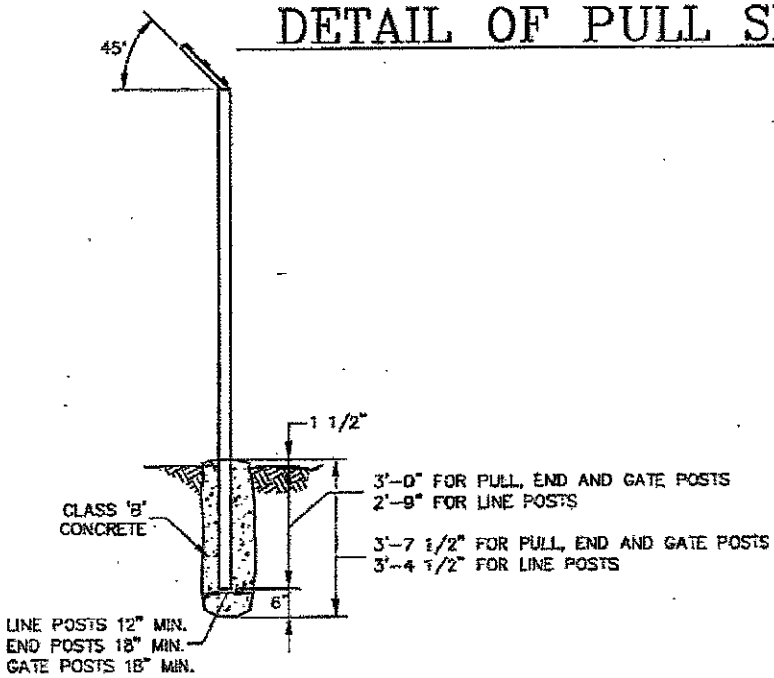

DETAIL OF POST FOOTINGS

Scale:		N.T.S.	Township of Collier Standard Details
Drwn By:	Chkd By:	Appd By:	Detail S-8
Filename:	Collierdet–1.dwg		Chain Link Fence (2 of 2)
Date:	December 2008		